หอสมุดกลาง สถาบันวิทยบริการ จุฬาลงกรณ์มหาวิทยาลัย

Appendix

๑. แผนที่ประเทศไทยแสดงสายส่งศักย์สูง ขนาด 230 KV, 115 KV และ 69 KV และสับสเตชั่นต่าง ๆ ของ Yanhee System ดังคำอธิบายใต้รูป

๒. Single line Diagram 69 KV Transmission Line สายกรุงเทพ - ระยอง

๓. Single line Diagram 115 KV Transmission Line สายกรุงเทพ - ระยอง

๔. Data ของ Inductive Reactance for 50 cycles.

๕. Data ของ Shunt Capacitive Reactance for 50 cycles.

๖. Conductor Loading :- All Aluminum, Copper & ACSR.

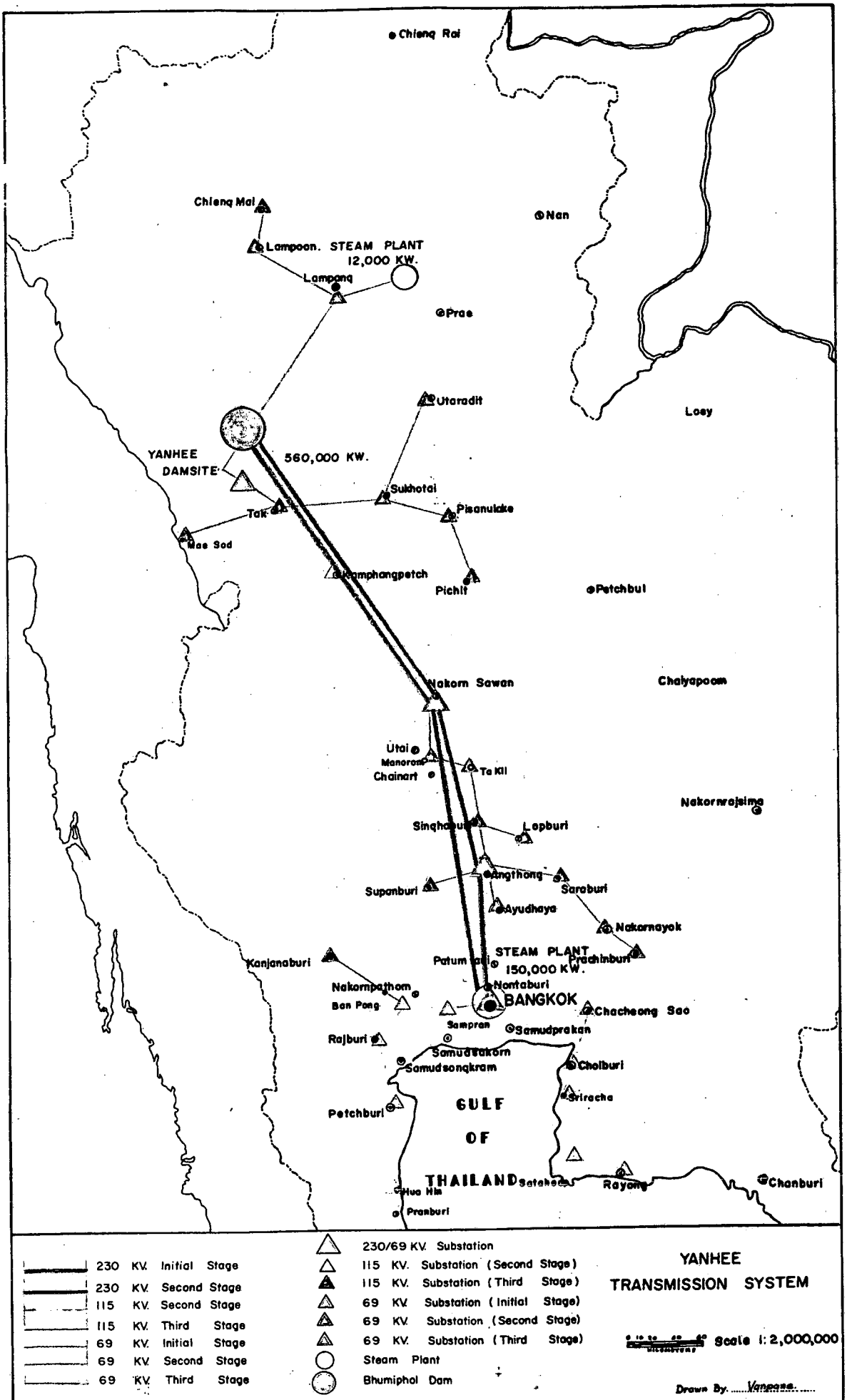
Chiang Rai
Chiang Mai
Nan
Lampoon. STEAM PLANT
12,000 KW.
Lampang
Prae
Uttaradit
Loey
YANHEE
DAMSITE
560,000 KW.
Sukhotai
Tak
Pisanulake
Mae Sod
Kamphangpetch
Pichit
Petchbul
Nakorn Sawan
Chaiyapoom
Utai
Manorom
Chainart
Ta Kli
Nakornrajsima
Singhaburi
Lopburi
Angthong
Suphanburi
Saraburi
Ayudhaya
Nakornayok
Kanjanaburi
STEAM PLANT
150,000 KW.
Prachinburi
Nakornpathom
Nontaburi
Ban Pong
BANGKOK
Chacheong Sao
Sampran
Samudprakan
Rajburi
Samudsakorn
Samudsongkram
Cholburi
Petchburi
Sriracha
GULF
OF
THAILAND
Hua Hin
Rayong
Chanburi
Pranburi
230 KV. Initial Stage
230 KV. Second Stage
115 KV. Second Stage
115 KV. Third Stage
69 KV. Initial Stage
69 KV. Second Stage
69 KV. Third Stage
230/69 KV. Substation
115 KV. Substation (Second Stage)
115 KV. Substation (Third Stage)
69 KV. Substation (Initial Stage)
69 KV. Substation (Second Stage)
69 KV. Substation (Third Stage)
Steam Plant
Bhumiphol Dam
YANHEE
TRANSMISSION SYSTEM
Scale 1: 2,000,000
Drawn By. Vanpaya

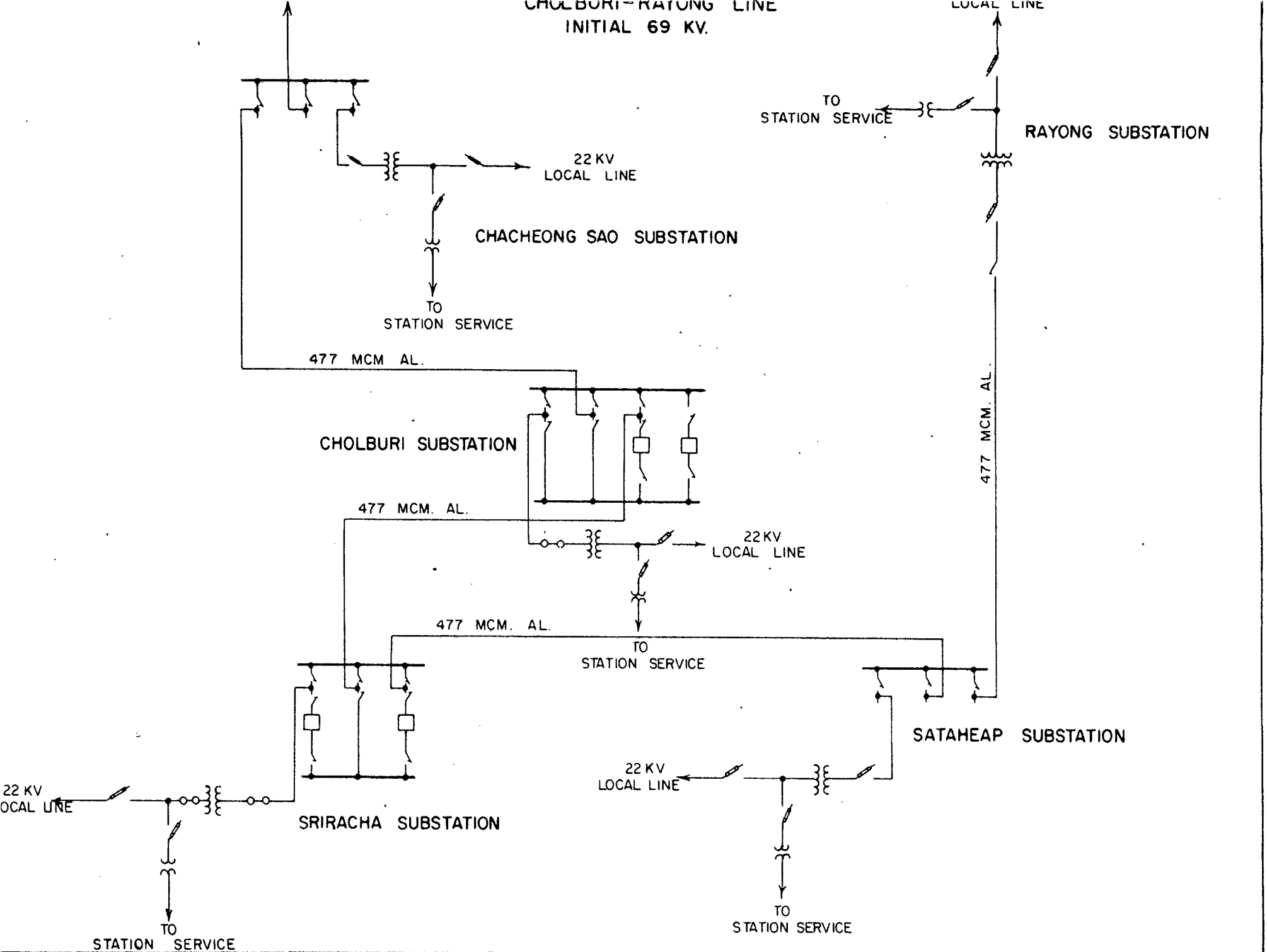
CHOLBURI-RAYONG LINE
INITIAL 69 KV.
LOCAL LINE
TO
STATION SERVICE
RAYONG SUBSTATION
22 KV
LOCAL LINE
CHACHEONG SAO SUBSTATION
TO
STATION SERVICE
477 MCM AL.
CHOLBURI SUBSTATION
477 MCM. AL.
477 MCM. AL.
22 KV
LOCAL LINE
477 MCM. AL.
TO
STATION SERVICE
SATAHEAP SUBSTATION
22 KV
OCAL LINE
SRIRACHA SUBSTATION
22 KV
LOCAL LINE
TO
STATION SERVICE
TO
STATION SERVICE

SINGLE LINE DIAGRAM

69 KV. TRANSMISSION LINE

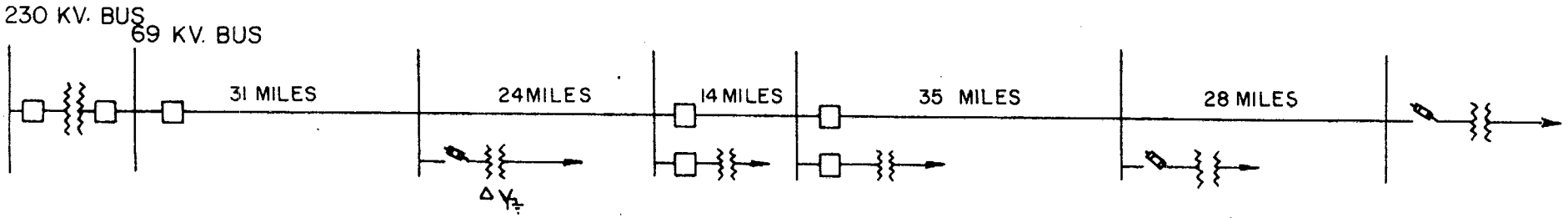

4/0 ACSR

Zp.u. = 0.379179+j0.485212 Yp.u = j0.006541	Zp.u. = 0.285816+j0.375648 Yp.u. = j0.005064	Zp.u. = 0.166726+j0.219128 Yp.u. = j0.002954	Zp.u. = 0.416815+j0.547820 Yp.u. = j0.007385	Zp.u. = 0.333452+j0.438256 Yp.u = j0.005908

336.4 MCM All Alu.

Zp.u = 0.199237+j0.424390 Yp.u. = j0.006727	Zp.u. =0.154248+j0.328560 Yp.u. = j0.005208	Zp.u.=0.089978+j0.191660 Yp.u. = j0.003038	Zp.u. =0.224945+j0.479150 Yp.u. = j0.007595	Zp.u.=0.179956+j0.383320 Yp.u.=j0.036076

477 MCM All Alu.

Zp.u. =0.140616+j0.412858 Yp.u. =j0.006913	Zp.u. =0.108804+j0.319632 Yp.u. = j0.005352	Zp.u. =0.063504+j0.186452 Yp.u.=j0.003122	Zp.u. =0.158760+j0.466130 Yp.u. = j0.007805	Zp.u. =0.127008+j0.372904 Yp.u.=j0.006244

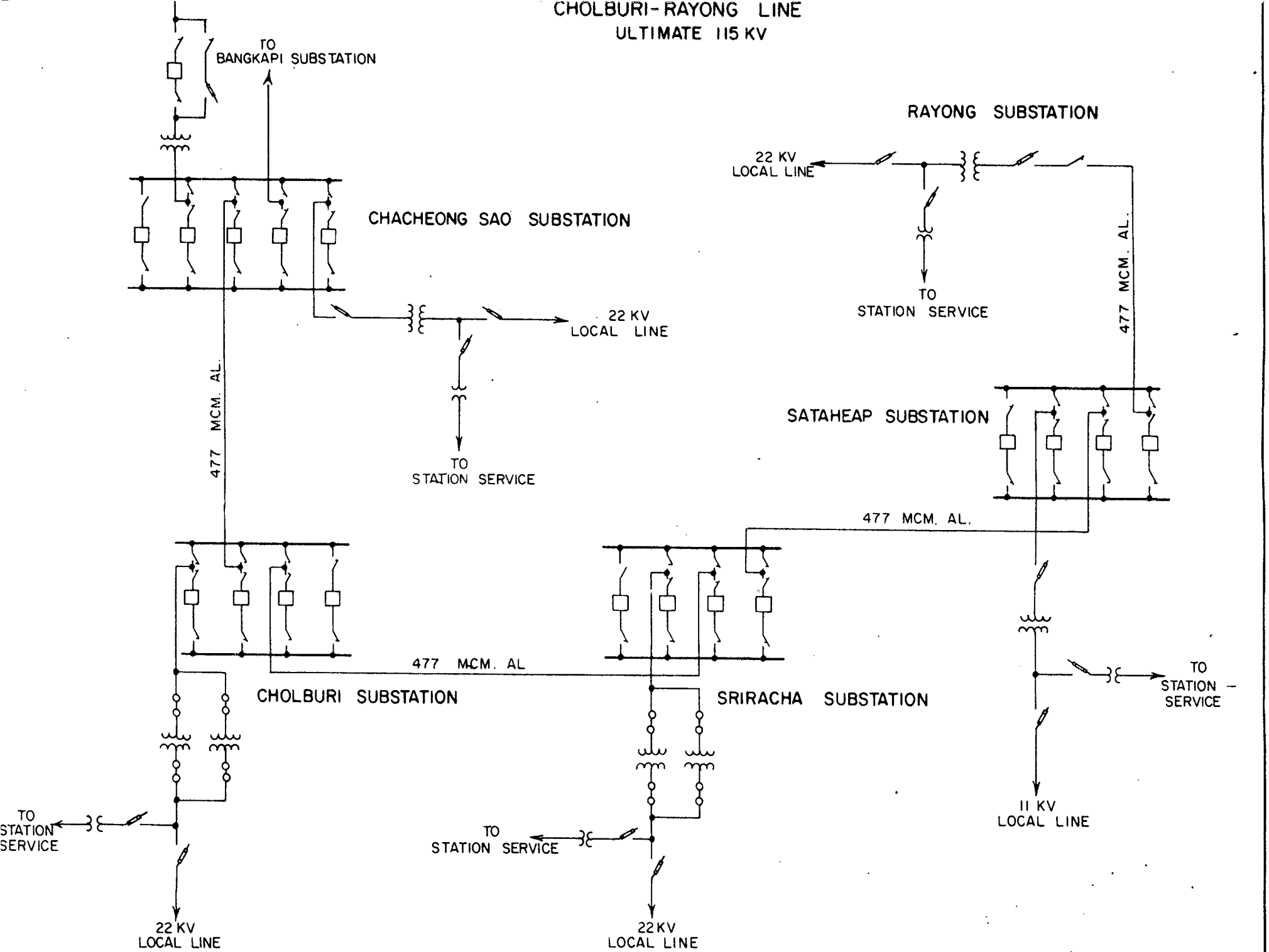
CHOLBURI-RAYONG LINE
ULTIMATE 115 KV
TO
BANGKAPI SUBSTATION
CHACHEONG SAO SUBSTATION
22 KV
LOCAL LINE
TO
STATION SERVICE
477 MCM. AL.
RAYONG SUBSTATION
22 KV
LOCAL LINE
TO
STATION SERVICE
477 MCM. AL.
SATAHEAP SUBSTATION
477 MCM. AL.
477 MCM. AL
CHOLBURI SUBSTATION
SRIRACHA SUBSTATION
TO
STATION
SERVICE
TO
STATION SERVICE
22 KV
LOCAL LINE
TO
STATION SERVICE
22 KV
LOCAL LINE
11 KV
LOCAL LINE

SINGLE LINE DIAGRAM

115 KV. TRANSMISSION LINE

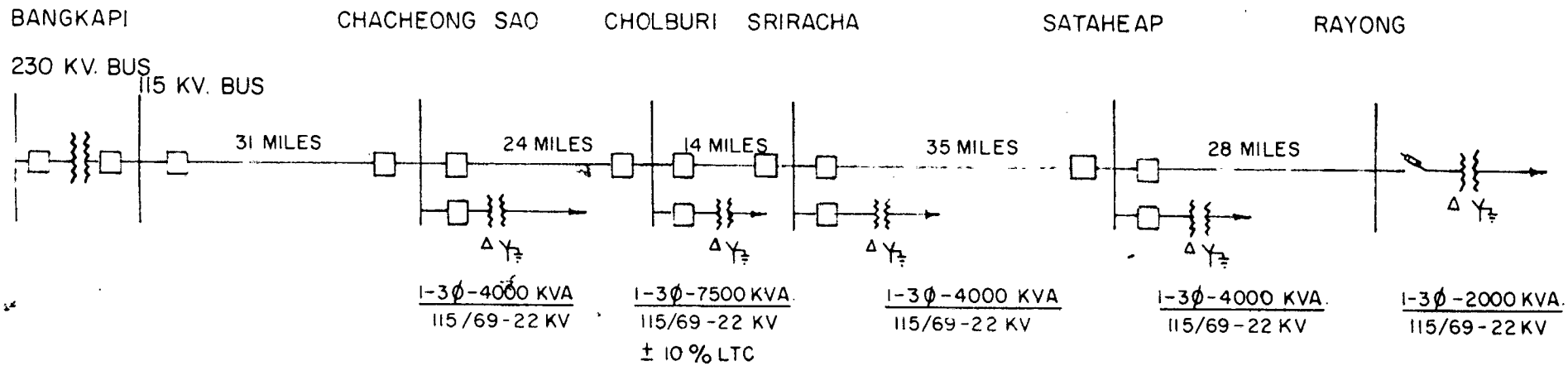

4/0 ACSR

Zp.u. = 0.132897 + j0.177630	Zp.u. = 0.102888 + j0.137520	Zp.u. = 0.060018 + j0.080220	Zp.u = 0.150045 + j0.200550	Zp.u. = 0.120036 + j0.160440
Yp.u = j0.017825	Yp.u. = j0.013800	Yp.u. = j0.008050	Yp.u = j0.020125	Yp.u. = j0.016100

336.4 MCM All Alu.

Zp.u = 0.071703 + j0.155713	Zp.u = 0.055512 + j0.120552	Zp.u. = 0.032382 + j0.070322	Zp.u = 0.080955 + j0.175805	Zp.u. = 0.064764 + j0.140644
Yp.u. = j0.018290	Yp.u. = j0.014160	Yp.u. = j0.008260	Yp.u = j0.020650	Yp.u = j0.016520

477 MCM All Alu.

Zp.u. = 0.050623 + j0.151559	Zp.u = 0.039192 + j0.117336	Zp.u. = 0.022862 + j0.068446	Zp.u = 0.057155 + j0.171115	Zp.u. = 0.045724 + j0.136892
Yp.u. = j0.018817	Yp.u = j0.014568	Yp.u. = j0.008498	Yp.u = j0.021245	Yp.u. = j0.016996

INDUCTIVE REACTANCE SPACING FACTOR (Xd) OHMS PER CONDUCTOR PER MILE FOR 50 CYCLES

SEPARATION

Inches

0	1	2	3	4	5	6	7	8	9	10	11
-	-0.2513	-0.1812	-0.1402	-0.1111	-0.0885	-0.0701	-0.0545	-0.0410	-0.0291	-0.0184	-0.0088
0	0.0081	0.0156	0.0226	0.0291	0.0352	0.0410	0.0465	0.0517	0.0566	0.0613	0.0658
0.0701	0.0742	0.0782	0.0820	0.0857	0.0892	0.0927	0.0960	0.0992	0.1023	0.1053	0.1082
0.1111	0.1139	0.1166	0.1192	0.1217	0.1242	0.1267	0.1291	0.1314	0.1337	0.1359	0.1380
0.1402	0.1423	0.1443	0.1463	0.1483	0.1502	0.1521	0.1539	0.1558	0.1576	0.1593	0.1610
0.1627	0.1644	0.1661	0.1677	0.1693	0.1708	0.1724	0.1739	0.1754	0.1769	0.1783	0.1798
0.1812	0.1826	0.1839	0.1853	0.1866	0.1880	0.1893	0.1906	0.1918	0.1931	0.1943	0.1956
0.1968	0.1980	0.1991	0.2003	0.2015	0.2026	0.2037	0.2049	0.2060	0.2071	0.2081	0.2092
0.2103	0.2112	0.2125	0.2135	0.2143	0.2153	0.2163	0.2173	0.2183	0.2192	0.2202	0.2212
0.2222	0.2230	0.2240	0.2249	0.2258	0.2267	0.2276	0.2284	0.2293	0.2302	0.2311	0.2319
0.2328	0.2336	0.2342	0.2352	0.2361	0.2367	0.2377	0.2385	0.2390	0.2401	0.2408	0.2414
0.2425	0.2431	0.2439	0.2447	0.2454	0.2462	0.2469	0.2476	0.2484	0.2491	0.2496	0.2503
0.2513	0.2519	0.2524	0.2533	0.2538	0.2547	0.2554	0.2560	0.2567	0.2574	0.2580	0.2584
0.2594	0.2600	0.2604	0.2612	0.2619	0.2625	0.2631	0.2638	0.2644	0.2650	0.2656	0.2662
0.2669	0.2674	0.2680	0.2686	0.2692	0.2698	0.2704	0.2709	0.2715	0.2721	0.2727	0.2732
0.2738	0.2743	0.2749	0.2755	0.2760	0.2765	0.2771	0.2776	0.2782	0.2787	0.2792	0.2798
0.2804	0.2808	0.2814	0.2819	0.2822	0.2829	0.2834	0.2839	0.2844	0.2849	0.2854	0.2859
0.2865	0.2869	0.2874	0.2879	0.2884	0.2889	0.2894	0.2898	0.2901	0.2908	0.2913	0.2917
0.2923	0.2927	0.2931	0.2936	0.2941	0.2945	0.2950	0.2954	0.2957	0.2963	0.2968	0.2972
0.2977	0.2981	0.2986	0.2990	0.2994	0.2999	0.3003	0.3007	0.3012	0.3016	0.3020	0.3024
0.3029	0.3033	0.3037	0.3041	0.3045	0.3050	0.3054	0.3058	0.3062	0.3066	0.3070	0.3074
0.3079	0.3082	0.3086	0.3090	0.3092	0.3098	0.3102	0.3106	0.3110	0.3114	0.3117	0.3121
0.3126	0.3127	0.3133	0.3137	0.3140	0.3144	0.3148	0.3152	0.3155	0.3159	0.3163	0.3166
0.3170	0.3174	0.3177	0.3181	0.3185	0.3188	0.3192	0.3195	0.3199	0.3202	0.3206	0.3209
0.3214	0.3217	0.3219	0.3224	0.3227	0.3230	0.3234	0.3237	0.3239	0.3244	0.3246	0.3251
0.3255	0.3258	0.3261	0.3264	0.3268	0.3271	0.3274	0.3278	0.3281	0.3284	0.3287	0.3293
0.3294	0.3297	0.3300	0.3304	0.3307	0.3310	0.3313	0.3316	0.3322	0.3324	0.3326	0.3329
0.3333	0.3335	0.3338	0.3341	0.3344	0.3347	0.3350	0.3354	0.3357	0.3360	0.3363	0.3366
0.3369	0.3372	0.3375	0.3378	0.3381	0.3384	0.3387	0.3390	0.3393	0.3396	0.3399	0.3402
0.3405	0.3407	0.3410	0.3413	0.3416	0.3419	0.3422	0.3424	0.3427	0.3430	0.3433	0.3436
0.3439	0.3441	0.3444	0.3447	0.3450	0.3453	0.3455	0.3458	0.3461	0.3464	0.3466	0.3469

SHUNT CAPACITIVE REACTANCE SPACING FACTOR (X'd) MEGOHM PER CONDUCTOR PER MILE 50 C/S

Feet	SEPARATION Inches											
	0	1	2	3	4	5	6	7	8	9	10	11
0	-	-0.0885	-0.0638	-0.0494	-0.0391	-0.0312	-0.0247	-0.0192	-0.0144	-0.0102	-0.0065	-0.0031
1	0	0.0028	0.0055	0.0079	0.0102	0.0124	0.0144	0.0164	0.0182	0.0199	0.0216	0.0232
2	0.0247	0.0261	0.0275	0.0289	0.0302	0.0314	0.0326	0.0338	0.0349	0.0360	0.0371	0.0381
3	0.0391	0.0401	0.0410	0.0420	0.0429	0.0437	0.0446	0.0454	0.0463	0.0471	0.0478	0.0486
4	0.0494	0.0501	0.0508	0.0515	0.0522	0.0529	0.0535	0.0542	0.0548	0.0555	0.0561	0.0567
5	0.0573	0.0579	0.0585	0.0590	0.0596	0.0601	0.0607	0.0612	0.0618	0.0623	0.0628	0.0633
6	0.0638	0.0643	0.0648	0.0652	0.0657	0.0662	0.0666	0.0671	0.0675	0.0680	0.0684	0.0689
7	0.0693	0.0697	0.0701	0.0705	0.0709	0.0713	0.0717	0.0721	0.0725	0.0729	0.0733	0.0737
8	0.0740	0.0744	0.0748	0.0752	0.0755	0.0758	0.0762	0.0765	0.0769	0.0772	0.0775	0.0779
9	0.0782	0.0785	0.0789	0.0792	0.0795	0.0798	0.0801	0.0804	0.0807	0.0811	0.0814	0.0817
10	0.0820	0.0823	0.0825	0.0828	0.0831	0.0834	0.0837	0.0840	0.0842	0.0845	0.0848	0.0850
11	0.0854	0.0856	0.0859	0.0862	0.0864	0.0867	0.0869	0.0872	0.0875	0.0877	0.0879	0.0881
12	0.0885	0.0887	0.0839	0.0892	0.0894	0.0897	0.0900	0.0902	0.0904	0.0906	0.0908	0.0910
13	0.0913	0.0915	0.0917	0.0920	0.0922	0.0924	0.0926	0.0929	0.0931	0.0933	0.0935	0.0937
14	0.0940	0.0942	0.0944	0.0946	0.0948	0.0950	0.0952	0.0954	0.0956	0.0958	0.0960	0.0962
15	0.0964	0.0966	0.0968	0.0970	0.0972	0.0974	0.0976	0.0978	0.0980	0.0981	0.0983	0.0985
16	0.0987	0.0989	0.0991	0.0993	0.0994	0.0996	0.0998	0.1000	0.1001	0.1003	0.1005	0.1007
17	0.1009	0.1010	0.1012	0.1014	0.1016	0.1017	0.1019	0.1020	0.1022	0.1024	0.1026	0.1027
18	0.1029	0.1031	0.1032	0.1034	0.1036	0.1037	0.1039	0.1040	0.1042	0.1043	0.1045	0.1046
19	0.1048	0.1050	0.1051	0.1053	0.1054	0.1056	0.1057	0.1059	0.1061	0.1062	0.1063	0.1065
20	0.1067	0.1068	0.1069	0.1071	0.1072	0.1074	0.1075	0.1077	0.1078	0.1080	0.1081	0.1082

Feet	SEPARATION											
	Inches											
	0	1	2	3	4	5	6	7	8	9	10	11
21	0.1084	0.1085	0.1087	0.1088	0.1089	0.1091	0.1092	0.1094	0.1095	0.1096	0.1098	0.1099
22	0.1100	0.1101	0.1103	0.1105	0.1106	0.1107	0.1108	0.1110	0.1111	0.1112	0.1114	0.1115
23	0.1116	0.1118	0.1119	0.1120	0.1121	0.1123	0.1124	0.1125	0.1126	0.1127	0.1129	0.1130
24	0.1131	0.1133	0.1134	0.1135	0.1136	0.1137	0.1139	0.1140	0.1141	0.1142	0.1143	0.1145
25	0.1146	0.1147	0.1148	0.1149	0.1151	0.1152	0.1153	0.1154	0.1155	0.1156	0.1157	0.1159
26	0.1160	0.1161	0.1162	0.1163	0.1164	0.1166	0.1167	0.1168	0.1169	0.1170	0.1171	0.1172
27	0.1173	0.1174	0.1175	0.1176	0.1177	0.1178	0.1179	0.1181	0.1182	0.1183	0.1184	0.1185
28	0.1186	0.1187	0.1188	0.1189	0.1190	0.1191	0.1192	0.1193	0.1194	0.1195	0.1196	0.1198
29	0.1199	0.1200	0.1201	0.1202	0.1203	0.1204	0.1205	0.1206	0.1207	0.1208	0.1209	0.1210
30	0.1211	0.1212	0.1213	0.1214	0.1215	0.1216	0.1217	0.1218	0.1219	0.1220	0.1221	0.1222

CONDUCTOR LOADING : ALL ALUMINIUM

FOR 100 KM/HR WIND (44 KG/M^2)

Conductor size Cir. Mills. or AWG	Stranding mm.	Over - all Diameter mm.	Cross Section Area mm^2	Ultimate Strength kg.	Conducter loading			Max allowble Tension (60% ultimate kg.
					Vertical (weight) kg / m.	Transverse (100km/Hr wind) kg / m.	Resultant $\sqrt{Vw^2 + p^2 + 0.0744}$ kg / m.	
6	7X1.554	4.674	13.290	240	.0366	.2057	.2833	145
5	7X1.746	5.323	16.774	303	.0463	.2302	.3092	185
4	7X1.961	5.893	21.161	375	.0583	.2593	.3402	225
3	7X2,202	6.604	26.645	464	.0735	.2906	.3742	280
2	7X2.474	7.417	33.613	575	.0927	.3263	.4136	345
1	7X2.776	8.331	42.387	698	.1170	.3666	.4592	420
1	19X1.687	8.433	42.387	765	.1170	.3711	.4635	460
1/0	7X3.119	9.347	53.484	846	.1475	.4113	.5113	510
1/0	19X1.692	9.474	53.484	947	.1475	.4169	.5166	570
2/0	7X3.503	10.516	67.419	1065	.1859	.4627	.5730	640
2/0	19X2.126	10.643	67.419	1175	.1859	.4683	.5782	705
3/0	7X3.932	11.786	85.032	1290	.2344	.5186	.6435	775
3/0	19X2.388	11.938	85.032	1450	.2344	.5253	.6496	870
4/0	7X4.417	13.259	107.226	1630	.2955	.5834	.7284	980
4/0	19X2.680	13.411	107.226	1765	.2955	.5901	.7344	1060
250,000	37X2.088	14.605	126.645	2205	.3492	.6426	.8058	1325
266,800	7X4.961	14.884	135.161	2055	.3727	.6549	.8279	1235
266,800	37X2.156	15.088	135.161	2350	.3727	.6639	.8358	1410
300,000	37X2.286	16.002	152.000	2645	.4190	.7041	.8937	1590
336,400	37X2.423	16.967	170.451	2910	.4702	.7465	.9566	1750

nwu. n 1-04

CONDUCTOR LOADING: ALL ALUMINIUM

FOR 100 KM/HR WIND (44 KG/M^2)

Conductor size Cir. Mills. or AWG	Stranding mm	Over - all Diameter mm.	Cross Section Area mm^2	Untimate Strength kg.	Conducter loading			Max. Allowable Tension (60% Ultimate) kg.
					Vertical (weight) kg. / m	Transverse (100 km/Hr wind) kg. / m.	Resultant $\sqrt{w^2+p^2}+0.0744$ kg. / m.	
350,000	37X2.380	17.297	177.354	3030	.4890	.7611	.9791	1820
397,500	19X3.675	18.390	201.419	3120	.5558	.8092	1.0561	1880
400,000	19X3.686	18.440	202.709	3140	.5587	.8114	1.0595	1890
450,000	37X2.302	19.609	228.000	3680	.6285	.8628	1.1418	2210
477,000	19X4.026	20.142	241.677	3670	.6668	.8862	1.1834	2205
500,000	37X2.951	20.650	253.354	4080	.6985	.9086	1.2205	2450
550,000	61X2.413	21.717	278.709	4765	.7678	.9555	1.3002	2860
556,500	37X3.114	21.793	282.000	4460	.7767	.9589	1.3084	2680
600,000	61X2.520	22.682	303.999	5195	.8377	.9980	1.3774	3120
636,000	37X3.330	23.317	322.257	5100	.8883	1.0259	1.4314	3060
650,000	37X3.366	23.571	329.354	5205	.9077	1.0371	1.4526	3125
650,000	61X2.621	23.597	329.354	5420	.9077	1.0383	1.4535	3255
700,000	61X2.720	24.486	354.709	5833	.9776	1.0774	1.5292	3500
715,500	37X3.533	24.740	362.580	5735	.9999	1.0886	1.5525	3440
750,000	61X2.817	25.349	379.999	6135	1.0476	1.1154	1.6046	3680
795,000	37X3.724	26.060	402.838	6245	1.1100	1.1466	1.6703	3759
800,000	61X2.908	26.187	405.354	6540	1.1175	1.1522	1.6795	3925
874,500	37X3.907	27.356	443.096	6725	1.2231	1.2037	1.7905	4035
900,000	61X3.086	27.788	456.064	7210	1.2574	1.2227	1.8283	4325
954,000	37X4.079	28.550	483.418	7340	1.3332	1.2562	1.9062	4405

nwu. n 1-04

CONDUCTOR LOADING: ALL ALUMINIUM

FOR 100 KM/HR WIND (44 KG/M^2)

Conductor size Cir.Mills. or AWG	Stranding mm.	Over - all Diameter mm.	Cross Section Area mm^2	Ultimate Strength kg.	Conductor loading			Max. Allowable Tension (60% Ultimate) kg.
					Overtical (weight) kg./m	Transverse (100 km/Hr wind) kg./m	Resultant $\sqrt{w^2+p^2}+0.0744$ kg./m	
1,000,000	61X3.251	29.261	506.709	8015	1.3972	1.2875	1.9744	4810
1,100,000	91X2.791	30.709	557.354	8820	1.5371	1.3512	2.1210	5300
1,113,000	61X3.432	30.886	563.934	8920	1.5550	1.3590	2.1396	5350
1,192,500	61X3.551	31.953	604.257	9570	1.6651	1.4059	2.2536	5740
1,200,000	91X2.916	32.080	608.063	9425	1.6770	1.4115	2.2664	5655
1,250,000	91X2.977	32.741	633.354	9820	1.7454	1.4406	2.3375	5900
1,272,000	61X3.668	33.020	644.515	9980	1.7767	1.4529	2.3695	5990
1,300,000	91X3.035	33.401	658,708	10,210	1.8168	1.4696	2.4112	6125
1,400,000	91X3.150	34.646	709.676	10,775	1.9552	1.5244	2.5536	6465
1,431,000	61X3.891	35.027	725.160	11,020	1.9999	1.5412	2.5993	6615
1,500,000	91X3.261	35.865	759.998	11,545	2.0951	1.5781	2.6973	6930
1,590,000	61X4.102	36.932	805.805	12,250	2.2231	1.6250	2.8281	7350
1,600,000	127X2.850	37.059	810.966	12,310	2.2350	1.6306	2.8410	7385
2,000,000	127X3.188	41.453	1013.546	12,475	2.7945	1.8239	3.4114	7485
2,000,000	169X2.764	41.453	1013.546	12,475	2.7945	1.8239	3.4114	7485

nwu. n 1-04

CONDUCTOR LOADING : ACSR

FOR 100 KM/HR WIND (44 ~~KG~~/M^2 OR 9 LB/FT^2)

Code Name	Conductor Size Cir. Mills AWG	Stranding A/S	Over - all Diameter mm.	Ultimate Strength Kg.	Conductor loading			Max. Allowable Tension (60% ultimate) kg.
					Vertical (Weight) Kg/m.	Transverse (100km/Hr wind) Kg/m.	Resultant $\sqrt{w^2+p^2}+0.0744$ kg. / m.	
Turkey	6	6/1	5.029	530	.0537	.2213	.3021	320
Thrush	5	6/1	5.664	660	.0677	.2492	.3326	395
Swan	4	6/1	6.350	830	.0854	.2794	.3666	500
Swanate	4	7/1	6.521	1,040	.0997	.2872	.3784	625
Swallow	3	6/1	7.137	1,020	.1077	.3140	.4064	610
Sparrow	2	6/1	8.026	1,265	.1359	.3531	.4527	760
Sparate	2	7/1	8.255	1,600	.1588	.3632	.4708	960
Robin	1	6/1	9.017	1,580	.1714	.3967	.5065	950
Raven	1/0	6/1	10.109	1,940	.2162	.4448	.5689	1,165
Quail	2/0	6/1	11.353	2,425	.2725	.4995	.6434	1,455
Pigeon	3/0	6/1	12.750	3,030	.3434	.5610	.7322	1,820
Penquin	4/0	6/1	14.300	3,820	.4332	.6292	.8383	2,290
Waxwing	266,800	18/1	15.468	3,220	.4300	.6806	.8795	1,930
Owl	266,800	6/7	16.078	4,375	.5078	.7074	.9452	2,625
Partridge	266,800	26/7	16.306	5,105	.5461	.7175	.9761	3,065
Ostrich	300,000	26/7	17.272	5,740	.6145	.7600	1.0517	3,445
Merlin	336,400	18/1	17.373	4,060	.5431	.7644	1.0121	2,435
Linnet	336,400	26/7	18.313	6,375	.6889	.8058	1.1345	3,825
Oriole	336,400	30/7	18.821	7,730	.7842	.8281	1.2149	4,640
Chickadee	397,500	18/1	18.872	4,715	.6428	.8304	1.1245	2,830

CONDUCTOR LOADING: ACSR

FOR 100 KM/HR WIND (44 KG/M^2 OR 9LB/FT^2)

Code name	Conductor Size Cir. Mills AWG.	Stranding A/S	Over - all Diameter mm.	Ultimate Strength Kg.	Conductor loasing			Max. Allowable Tension (60% ultimate) Kg.
					Vertical ((weight) Kg.	Transverse (100KM/ Hr Wind) Kg/m.	Resultant $\sqrt{Vw^2+p^2}+0.0744$ Kg./m.	
Ibis	397,500	26/7	19.888	7,345	.8139	.8751	1.2695	4,405
Lark	397,500	30/7	20.472	9,065	.9270	.9008	1.3670	5,440
Pelican	477,000	18/1	20.676	5,580	.7708	.9097	1.2667	3,350
Flicker	477,000	24/7	21.488	7,800	.9151	.9455	1.3902	4,680
Hawk	477,000	26/7	21.793	8,815	.9776	.9589	1.4438	5,290
Hen	477,000	30/7	22.428	10,570	1.1115	.9868	1.5607	6,340
Parakeet	556,500	24/7	23.216	9,000	1.0669	1.0215	1.5515	5,406
Dove	556,500	26/7	23.545	10,160	1.1398	1.0360	1.6147	6,095
Eagle	556,500	30/7	24.206	12,340	1.2975	1.0651	1.7531	7,405
Peacock	605,000	24/7	24.206	9,750	1.1606	1.0651	1.6497	5,850
Duck	605,000	54/7	24.206	10,205	-1.1580	1.0651	1.6477	6,125
Squab	605,000	26/7	24.536	10,930	1.2395	1.0796	1.7181	6,560
Teal	605,000	30/19	25.247	13,610	1.3987	1.1109	1.8606	8,165
Rook	636,000	24/7	24.816	10,250	1.2187	1.0919	1.7107	6,150
Goose	636,000	54/7	24.815	10,705	-1.2172	1.0919	1.7096	6,425
Grosbeak	636,000	26/7	25.146	11,340	1.3020	1.1064	1.7830	6,805
Egret	636,000	30/19	25.882	14,290	1.4701	1.1388	1.9340	8,575
Flamingo	666,600	24/7	25.400	10,750	1.2782	1.1176	1.7723	6,450
Gull	666,660	54/7	25.400	11,115	-1.2758	1.1176	1.7705	6,670
Crow	715,500	54/7	26.314	11,930	1.3704	1.1578	1.8684	7,160

nwb. n 1—04

CONDUCTOR LOADING: ACSR

FOR 100 KM/HR (44KG/M^2 OR 9 LB/FT^2)

Code Name	Conductor Size Cir. Mills AWG	Stranding A/S	Over-all Diameter mm.	Ultimate Strength kg.	Conductor loading: Vertical (weight) kg.	Conductor loading: Transverse (100KM/HR Wind) kg/m	Conductor loading: Resultant $\sqrt{w^2+p^2}+0.0744$ kg/m.	Max. Allowable Tension (60% ultimate) Kg.
Starling	715,500	26/7	26.695	12,745	1.4657	1.1746	1.9527	7,645
Redwing	715,500	30/19	27.457	15,695	1.6532	1.2081	2.1220	9,415
Condor	795,000	54/7	27.762	12,925	1.5237	1.2215	2.0273	7,755
Drake	795,000	26/7	28,143	14,150	1.6279	1.2383	2.1197	8,490
Mallard	795,000	30/19	28,956	17,420	1.8377	1.2741	2.3106	10,450
Crane	874,500	54/7	29,108	14,245	1.6755	1.2808	2.1834	8.545
Canary	900,000	54/7	29,514	14,650	1.7246	1.2986	2.2332	8,790
Cardinal	954,000	54/7	30.378	15,515	1.8288	1.3366	2.3396	9,310
Curlew	1,033,500	54/7	31.648	16,830	1.9805	1.3925	2.4954	10,100
Finch	1,113.000	54/19	32.842	18,235	2.1293	1.4450	2.6477	10,940
Grackle	1,192.500	54/19	33.985	19,550	-2.2776	1.4953	2.7990	11,730
Pheasant	1,272.000	54/19	35.102	20,320	2.4329	1.5445	2.9561	12,190
Martin	1,351.500	54/19	36.169	21,590	-2.5815	1.5914	3.1070	12,955
Plover	1,431,000	54/19	37.211	22,860	2.7379	1.6373	3.2645	13,715
Parrot	1,510,500	54/19	38.252	24,130	-2.8850	1.6831	3.4145	14,480
Falcon	1,590,000	54/19	39.243	25,400	3.0415	1.7267	3.5719	15,240

CONDUCTOR LOADING : COPPER
FOR 100 KM/HR WIND (44 KG/M^2)

Conductor size Cir. Mills. or AWG	Stranding mms.	Over - all Diameter mms.	Cross Section Area mm^2	Ultimate Strenght kgs	Conductor Loading			Max. allowble Tension (60% ultimate) kg.
					Vertical (weight) kg / m.	Transverse (100km/Hr wind) kg / m	Resultant $\sqrt{w^2 + p^2 + 0.0744}$ kg / m	
4	3X2.9972	6.4516	21.1483	852	0.1887	0.2839	0.4153	510
3	3X3.3655	7.2390	26.6709	1,070	0.2379	0.3185	0.4719	640
2	3X3.7770	8.1280	33.6322	1,321	0.2999	0.3576	0.5411	795
2	7X2.4740	7.4168	33.6322	1,384	0.3030	0.3263	0.5197	830
1	3X4.2418	9.1440	42.4064	1,642	0.3783	0.4023	0.6266	985
1	7X2.7762	8.3312	42.4064	1,725	0.3819	0.3666	0.6038	1035
1/0	7X3.1191	9.3472	53.4580	2,155	0.4816	0.4113	0.7077	1295
2/0	7X3.5027	10.5156	67.4192	2,688	0.6076	0.4627	0.8381	1615
3/0	7X3.9319	11.7856	85.0321	3,341	0.7661	0.5186	0.9995	2005
3/0	12X3.0048	12.4968	85.0321	3,427	0.7661	0.5499	1.0174	2055
4/0	7X4.4171	13.2588	107.2256	4,152	0.9660	0.5834	1.2029	2490
4/0	12X3.3731	14.0208	107.2256	4,301	0.9660	0.6169	1.2206	2580
4/0	19X2.6797	13.4112	107.2256	4,362	0.9660	0.5901	1.2064	2620
250,000	12X3.6652	15.2400	126.7094	5,048	1.1413	0.6706	1.2157	3030
250,000	19X2.9134	14.5796	126.7094	5,153	1.1413	0.6415	1.3836	3090
300,000	12X4.0157	16.6878	151.9997	5,974	1.3695	0.7343	1.6283	3585
300,000	19X3.1928	15.9766	151.9997	6,128	1.3695	0.7030	1.6138	3675
350,000	12X4.3383	18.0340	177.3545	6,868	1.5977	0.7935	1.8583	4120
350,000	19X3.4468	17.2466	177.3549	7.072	1.5977	0.7589	1.8432	4245
400,000	19X3.6855	18.4404	202.7093	7965	1.8259	0.8114	2.0725	4780
450,000	19X3.9091	19.5580	227.9995	8,959	2.0541	0.8606	2.3015	5375

CONDUCTOR LOADING: COPPER

FOR 100 KM/AR WIND (44 KG/M^2)

Conductor Size Cir. Mills or AWG	stranding mm.	Over-all Diameter mm.	Cross Section Area mm^2	Ultimate Strenght kg.	Conductor Loading			Max. Allowable Tension (60% ultimate) kg.
					Vertical (weight) kg / m.	Transverse (100km/ Hr wind) kg / m.	Resultant $\sqrt{w^2+p^2}+0.0744$ kg / m.	
500,000	19X4.1199	20.5994	253.3543	9,957	2.2823	0.9064	2.5301	5975
500,000	37X2.9515	20.6502	253.3543	10,211	2.2823	0.9086	2.5309	6125

nwb. n 1-04

รายชื่อหนังสือและบทความที่อ้างถึงในวิทยานิพนธ์

1. "Electrical Transmission and Distribution"

2. "Elements of power System Analysis" by WILLIAM D. STEVENSON, JR.

3. "Principles of Electric Power Transmission" by L.F. WOODRUFF.

4. Data Book for Reynolds Aluminum Electrical Conductors.

5. "Standard Handbook for Electrical Engineers"
   Ninth Edition A.E. Knowlton Dditor - in Chief.

6. Kaiser Aluminum. Data book.