Sustainable Two-Step MINLP Heat Exchanger Network Synthesis with Practical Detailed Design

Mr. Thanawat Boonvaerojkul

จุฬาลงกรณ์มหาวิทยาลัย
CHULALONGKORN UNIVERSITY

A Thesis Submitted in Partial Fulfillment of the Requirements
for the Degree of Master of Science in Petrochemical Technology
Common Course
THE PETROLEUM & PETROCHEMICAL COLLEGE
Chulalongkorn University
Academic Year 2021
Copyright of Chulalongkorn University

การสังเคราะห์เครือข่ายแลกเปลี่ยนความร้อนอย่างยั่งยืนและการออกแบบเชิงประยุกต์

นายธนวัฒน์ บุญเวโรจน์กุล

จุฬาลงกรณ์มหาวิทยาลัย
CHULALONGKORN UNIVERSITY

วิทยานิพนธ์นี้เป็นส่วนหนึ่งของการศึกษาตามหลักสูตรปริญญาวิทยาศาสตรมหาบัณฑิต
สาขาวิชาเทคโนโลยีปิโตรเคมี ไม่สังกัดภาควิชา/เทียบเท่า
วิทยาลัยปิโตรเลียมและปิโตรเคมี จุฬาลงกรณ์มหาวิทยาลัย
ปีการศึกษา 2564

ลิขสิทธิ์ของจุฬาลงกรณ์มหาวิทยาลัย

Thesis Title	Sustainable Two-Step MINLP Heat Exchanger Network Synthesis with Practical Detailed Design
By	Mr. Thanawat Boonvaerojkul
Field of Study	Petrochemical Technology
Thesis Advisor	Assistant Professor KITIPAT SIEMANOND, D.Eng.

Accepted by the THE PETROLEUM & PETROCHEMICAL COLLEGE, Chulalongkorn University in Partial Fulfillment of the Requirement for the Master of Science

..... Dean of the THE PETROLEUM & PETROCHEMICAL COLLEGE
(Professor PRAMOCH RANGSUNVIGIT, Ph.D.)

THESIS COMMITTEE

..... Chairman
(Professor BOONYARACH KITIYANAN, Ph.D.)

..... Thesis Advisor
(Assistant Professor KITIPAT SIEMANOND, D.Eng.)

..... External Examiner
(Associate Professor Chanin Panjapornpon, Ph.D.)

จุฬาลงกรณ์มหาวิทยาลัย
CHULALONGKORN UNIVERSITY

ธนวัฒน์ บุญเวโรจน์กุล : การสังเคราะห์เครือข่ายแลกเปลี่ยนความร้อนอย่างยั่งยืนและการออกแบบเชิงประยุกต์. (Sustainable Two-Step MINLP Heat Exchanger Network Synthesis with Practical Detailed Design) อ.ที่ปรึกษาหลัก : ผศ. ดร.กิติพัฒน์ สีมานนท์

การพัฒนาอย่างยั่งยืนนั้นมุ่งเน้นไปที่การอนุรักษ์พลังงาน การลดการปล่อยมลภาวะและการลดผลกระทบที่มีต่อสิ่งแวดล้อมให้น้อยลง ซึ่งการศึกษาวิจัยการสังเคราะห์เครือข่ายแลกเปลี่ยนความร้อนยังคงเป็นสิ่งท้าทายที่จะช่วยแก้ไขปัญหาต่าง ๆ ที่กล่าวมาข้างต้นได้ ในการศึกษาการสังเคราะห์เครือข่ายแลกเปลี่ยนความร้อนที่ผ่านมา จะเน้นที่ไปการลดค่าใช้จ่ายประจำปีผ่านการออกแบบโครงสร้างของเครือข่ายเท่านั้น โดยไม่คำนึงถึงค่าใช้จ่ายที่มาจากการออกแบบโดยรายละเอียดในแต่ละเครื่องแลกเปลี่ยนความร้อน ส่งผลให้ได้ผลลัพธ์เพียงแค่เครือข่ายแลกเปลี่ยนความร้อนที่ไม่สมจริงและเป็นอุดมคติ ดังนั้นการออกแบบโดยละเอียดของเครื่องแลกเปลี่ยนความร้อนชนิดเชลล์และท่อจะสามารถคำนวณค่าใช้จ่ายประจำปีใหม่ได้ โดยปรับปรุงค่าใช้จ่ายที่มาจากพื้นที่แลกเปลี่ยนความร้อนให้ถูกต้อง รวมไปถึงค่าใช้จ่ายสำหรับความดันลดทั้งหมดในเครื่องแลกเปลี่ยนความร้อน ในส่วนของตัวอย่างตัวแปรที่มาจากการออกแบบโดยรายละเอียดของเครื่องแลกเปลี่ยนความร้อนชนิดเชลล์และท่อนั้น ประกอบไปด้วยความดันลด ค่าสัมประสิทธิ์การถ่ายโอนความร้อน ความเร็วของของไหล เป็นต้น โมเดลโครงสร้างชั้นสูงแบบลำดับขั้นจะถูกเปลี่ยนแปลงใหม่เป็น 2 ขั้นตอน ได้แก่ ขั้นตอนการสร้างเครือข่ายแลกเปลี่ยนความร้อนแบบอุดมคติด้วยโปรแกรมที่ไม่เป็นเชิงเส้นตรงผสานกับจำนวนเต็ม และขั้นตอนการออกแบบโดยรายละเอียดในแต่ละเครื่องแลกเปลี่ยนความร้อน ด้วยเหตุนี้จุดประสงค์หลักของงานนี้คือการสังเคราะห์เครือข่ายแลกเปลี่ยนความร้อนเชิงประยุกต์ที่เสมือนจริงมากที่สุด พร้อมทั้งมีค่าใช้จ่ายประจำปีของเครือข่ายที่ต่ำที่สุด โดยผลลัพธ์นั้นพบว่า ขั้นตอนการออกแบบสองขั้นตอนสามารถลดค่าใช้จ่ายประจำปีได้อย่างมีนัยสำคัญเมื่อเปรียบเทียบกับกรณีศึกษาที่ถูกตีพิมพ์

สาขาวิชา	เทคโนโลยีปิโตรเคมี	ลายมือชื่อนิสิต
		.....
ปีการศึกษา	2564	ลายมือชื่อ อ.ที่ปรึกษาหลัก
		.....

6371014063 : MAJOR PETROCHEMICAL TECHNOLOGY
KEYWORD: Heat Exchanger Network Synthesis (HENS), Individual heat exchanger design, Mixed-integer non-linear programming, Heat integration

Thanawat Boonvaerojkul : Sustainable Two-Step MINLP Heat Exchanger Network Synthesis with Practical Detailed Design. Advisor: Asst. Prof. KITIPAT SIEMANOND, D.Eng.

Due to sustainable development that focuses on energy conservation, decreasing emissions and environmental effect, the research of heat exchanger network synthesis (HENS) is still necessary and challenging. Most academic studies in the subject of HENS aim on reducing total annual cost (TAC) through optimal topology design without the detailed design costs of each heat exchanger in the network, resulting in conceptual HEN designs. Hence, the detailed design of shell and tube heat exchangers is recalculated for TAC and corrected area costs, including the pumping costs from overall pressure drop of heat exchangers. For a shell and tube heat exchanger, its detailed design variables comprise of pressure drop, heat transfer coefficient, fluid velocity, etc. The stage-wise superstructure (SWS) model (Yee et al., 1990) for HENS is modified in two steps: the first step is to produce conceptual HEN using mixed-integer non-linear programming (MINLP), and the second one is to do the detailed design for individual heat exchanger. Therefore, the major objective is to synthesize the optimal practical HEN with the minimum TAC, the results reveal that two-step designs can significantly decrease more TAC compared to published case studies.

จุฬาลงกรณ์มหาวิทยาลัย
CHULALONGKORN UNIVERSITY

Field of Study:	Petrochemical Technology	Student's Signature .....
Academic Year:	2021	Advisor's Signature .....

ACKNOWLEDGEMENTS

I would really like to convey my genuinely heartfelt gratitude to my thesis advisor, Asst. Prof. Kitipat Siemanond, who granted me a precious opportunity to do this thesis and suggested me doing this thesis successfully.

My sincere appreciation also goes to the thesis committees, Prof. Boonyarach Kitiyanan and Assoc. Prof. Dr. Chanin Panjapornpon for devoting valuable time to become the thesis committees.

I would like to give thanks to The Petroleum and Petrochemical College for providing the M.S. full scholarship to support tuition fees.

I would like to acknowledge my family, friends, and the entire KS team for their assistance and encouragement too.

Finally, I'd want to express my gratitude to all PPC friends and staff for their support and assistance on several occasions.

Thanawat Boonvaerojkul

จุฬาลงกรณ์มหาวิทยาลัย
CHULALONGKORN UNIVERSITY

TABLE OF CONTENTS

Page

ABSTRACT (THAI) iii
ABSTRACT (ENGLISH) iv
ACKNOWLEDGEMENTS v
TABLE OF CONTENTS vi
LIST OF TABLES ix
LIST OF FIGURES xiv
CHAPTER 1 INTRODUCTION 1
CHAPTER 2 LITERATURE REVIEW 5
2.1 Types of Heat Exchangers 5
2.1.1 Double Pipe Heat Exchanger 5
2.1.2 Shell and Tube Heat Exchanger 6
2.1.3 Coiled Tube Heat Exchanger 7
2.1.4 Plate Heat Exchanger 7
2.1.5 Printed Circuit Heat Exchanger 8
2.1.6 Scraped Surface Heat Exchanger 9
2.1.7 Spiral Plate Heat Exchanger 10
2.2 Pinch Technology (PT) Model 11
2.3 First Stage-Wise Superstructure Model 12
2.4 Another Stage-Wise Superstructure Model 14
2.4.1 SWS Model with Pressure Drop 14
2.4.2 SWS Model with Non-Isothermal Mixing 14
2.4.3 SWS Model with Substages, Sub-Splits and Cross Flows 16
2.5 The Newest SWS Model with Detailed Design 16
2.6 The Only Detailed Design Model for Heat Exchangers 20
2.7 Combined Heat and Mass Exchanger Network (CHAMEN) 23

2.7.1 CHAMEN with Regeneration and Renewable Energy 23
2.7.1.1 Example 1 24
2.7.1.2 Example 2 24
2.7.1.3 Example 3 25
CHAPTER 3 EXPERIMENTAL 27
3.1 Programs and Equipment 27
3.1.1 Programs 27
3.1.2 Equipments 27
3.2 Optimization Procedures of HEN for General Case Studies; Examples 1, 2, 3, and 4 27
3.2.1 General Case Studies Description 27
3.2.1.1 Example 1 27
3.2.1.2 Example 2 28
3.2.1.3 Example 3 29
3.2.1.4 Example 4 31
3.2.2 The SWS Model (Step-1 Model) 33
3.2.3 Individual Heat Exchanger Detailed Design Model (Step-2 Model) 33
3.2.4 Step Updating the Variables 34
3.3 Optimization Procedures of HEN for the Challenging Case Study 36
3.3.1 Process Description 39
3.3.2 Tuning the GAMS Model 40
3.3.3 The Improved Design HENS 43
3.3.4 The SWS Model (Step-1 Model) 44
3.3.5 Individual Heat Exchanger Detailed Design Model (Step-2 Model) 45
3.3.6 Step Updating the Variables 46
3.3.7 The Detailed Design HEN of the Base-Case for Challenging Case Study 48
CHAPTER 4 RESULTS AND DISCUSSION 52
4.1 General Case Studies 52
4.1.1 Example 1 53

4.1.2 Example 2 58
4.1.3 Example 3 64
4.1.4 Example 4 79
4.2 The Challenging Case Study 99
CHAPTER 5 CONCLUSIONS AND RECOMMENDATIONS 123
5.1 Conclusions 123
5.2 Recommendations 124
APPENDICES 125
Appendix A Graphical Abstract 125
Appendix B Lists of Equations for All Case Studies 126
REFERENCES 141
VITA 146

จุฬาลงกรณ์มหาวิทยาลัย
CHULALONGKORN UNIVERSITY

LIST OF TABLES

Page

Table 2.1 Summary features and specialties of each heat exchanger types (Wang, 2021) 11

Table 2.2 Summary of total annual cost in comparison with other studies (Kazi, 2021a) 18

Table 2.3 Detail design for each heat exchanger (Kazi, 2021a) 20

Table 2.4 The types of shell and tube heat exchanger (Chang, 2022) 21

Table 2.5 Cost coefficient for each type of heat exchanger (Pan, 2013) 22

Table 3.1 The data of example 1 28

Table 3.2 The data of example 2 29

Table 3.3 The data of example 3 30

Table 3.4 The data of example 4 31

Table 3.5 Stream data of the base case (Wu, 2022) 37

Table 3.6 The economic data of base case that represent by Aspen Plus (Wu, 2022) 38

Table 3.7 Tuning of the duty from heat exchanger between the base case and model 41

Table 3.8 Tuning of the area from heat exchanger between the base case and model 42

Table 3.9 Tuning of the LMTD from heat exchanger between the base case and model 42

Table 3.10 Tuning of the Cp from heat exchanger between the base case and model 43

Table 3.11 Design variables for each heat exchanger of the base case (Exchanger 1 to 5) 48

Table 3.12 Design variables for each heat exchanger of the base case (Exchanger 6 to 10) 49

Table 3.13 Design variables for each heat exchanger of the base case (Exchanger 11 to 15) 50

Table 3.14 Comparison of the original base case and applying the 2nd step 51

Table 3.15 The comparison of TAC between the original base case and applying 2nd design of this study 51

Table 4.1 Stream properties in the case studies (Kazi, 2021a) 53

Table 4.2 Stream data for example 1 (Mizutani, 2003) 53

Table 4.3 Parameter data for example 1 (Mizutani, 2003).....53

Table 4.4 General design of heat exchangers and utilities from step 1 calculation for example 1 55

Table 4.5 Additional parameters for step 2 calculation of example 1.....55

Table 4.6 Design variables for each heat exchanger in example 1 56

Table 4.7 Comparison of step 1 calculation and step 2 calculation of example 1 57

Table 4.8 Summary of TAC compared with other studies for example 1 57

Table 4.9 Stream data for example 2 (Mizutani, 2003) 58

Table 4.10 Parameter data for example 2 (Mizutani, 2003).....59

Table 4.11 General design of heat exchangers and utilities from step 1 calculation for example 2 60

Table 4.12 Additional parameters for step 2 calculation of example 2.....61

Table 4.13 Design variables for each heat exchangers in example 2.....61

Table 4.14 Comparison of step 1 calculation and step 2 calculation of example 2 62

Table 4.15 Summary of TAC compared with other studies for example 2 63

Table 4.16 Stream data for example 3 (Mizutani, 2003) 64

Table 4.17 Parameter data for example 3 (Mizutani, 2003).....65

Table 4.18 General design of heat exchangers and utilities from step 1 calculation for example 3 (initially) 66

Table 4.19 Additional parameters for step 2 calculation of example 3.....67

Table 4.20 Design variables for each heat exchangers (Exchanger 1 to 5) in example 3.....68

Table 4.21 Design variables for each heat exchangers (Exchanger 6 to 10) in example 3.....69

Table 4.22 Design variables for each heat exchangers (Exchanger 11 to 13) in example 3 70

Table 4.23 Comparison of step 1 calculation and step 2 calculation of example 3 71

Table 4.24 General design of heat exchangers and utilities from step 1 calculation for example 3 (1st updating).....73

Table 4.25 Design variables for each heat exchangers (Exchanger 1 to 5) in example 3 (1st updating) 74

จุฬาลงกรณ์มหาวิทยาลัย
Chulalongkorn University

Table 4.26 Design variables for each heat exchangers (Exchanger 6 to 10) in example 3 (1st updating) 75

Table 4.27 Design variables for each heat exchangers (Exchanger 11 to 13) in example 3 (1st updating) 76

Table 4.28 Comparison of step 1 calculation and step 2 calculation of example 3 (1st updating) 77

Table 4.29 The comparison of TAC among updating for example 3 78

Table 4.30 Summary of TAC compared with other studies for example 3 79

Table 4.31 General design of heat exchangers and utilities from step 1 calculation for example 4 80

Table 4.32 Design variables for each heat exchangers (Exchanger 1 to 5) in example 4 81

Table 4.33 Design variables for each heat exchangers (Exchanger 6 to 10) in example 4 82

Table 4.34 Design variables for each heat exchangers (Exchanger 11) in example 4 83

Table 4.35 Comparison of step 1 calculation and step 2 calculation of example 4 85

Table 4.36 General design of heat exchangers and utilities from step 1 calculation for example 4 (1st updating) 86

Table 4.37 Design variables for each heat exchangers (Exchanger 1 to 5) in example 4 (1st updating) 87

Table 4.38 Design variables for each heat exchangers (Exchanger 6 to 10) in example 4 (1st updating) 88

Table 4.39 Design variables for each heat exchangers (Exchanger 11) in example 4 (1st updating) 89

Table 4.40 Comparison of step 1 calculation and step 2 calculation of example 4 (1st updating) 91

Table 4.41 General design of heat exchangers and utilities from step 1 calculation for example 4 (2nd updating) 93

Table 4.42 Design variables for each heat exchangers (Exchanger 1 to 5) in example 4 (2nd updating) 93

Table 4.43 Design variables for each heat exchangers (Exchanger 6 to 10) in example 4 (2nd updating) 94

CHULALONGKORN UNIVERSITY

Table 4.44 Design variables for each heat exchangers (Exchanger 11) in example 4 (2nd updating) 96

Table 4.45 Comparison of step 1 calculation and step 2 calculation of example 4 (2nd updating) 97

Table 4.46 The comparison of TAC among updating for example 4 98

Table 4.47 Summary of TAC compared with other studies for example 4 99

Table 4.48 Parameter data for first step calculation 100

Table 4.49 The economic data of improved design HEN from this study 100

Table 4.50 Comparison the net duties of this study that are validated by Aspen Plus 101

Table 4.51 Parameter data for second step calculation 102

Table 4.52 Design variables for each heat exchanger (Exchanger 1 to 5) 103

Table 4.53 Design variables for each heat exchanger (Exchanger 6 to 10) 103

Table 4.54 Design variables for each heat exchanger (Exchanger 11 to 15) 104

Table 4.55 Design variables for each heat exchanger (Exchanger 16 to 20) 105

Table 4.56 Comparison of step 1 calculation and step 2 calculation 106

Table 4.57 The economic data of improved design HEN from this study after 1st updating 107

Table 4.58 Comparison the net duties of this study that are validated by Aspen Plus after 1st updating 108

Table 4.59 Design variables for each heat exchanger after 1st updating (Exchanger 1 to 5) 109

Table 4.60 Design variables for each heat exchanger after 1st updating (Exchanger 6 to 10) 110

Table 4.61 Design variables for each heat exchanger after 1st updating (Exchanger 11 to 15) 111

Table 4.62 Design variables for each heat exchanger after 1st updating (Exchanger 16 to 20) 112

Table 4.63 Comparison of step 1 calculation and step 2 calculation after 1st updating 113

Table 4.64 The economic data of improved design network from this study after 2nd updating 114

จุฬาลงกรณ์มหาวิทยาลัย
CHULALONGKORN UNIVERSITY

Table 4.65 Comparison the net duties of this study that are validated by Aspen Plus after 2nd updating.....115

Table 4.66 Design variables for each heat exchanger after 2nd updating (Exchanger 1 to 5).....116

Table 4.67 Design variables for each heat exchanger after 2nd updating (Exchanger 6 to 10).....117

Table 4.68 Design variables for each heat exchanger after 2nd updating (Exchanger 11 to 15).....117

Table 4.69 Design variables for each heat exchanger after 2nd updating (Exchanger 16 to 20).....118

Table 4.70 Comparison of step 1 calculation and step 2 calculation after 2nd updating 119

Table 4.71 The comparison of TAC among improved HEN of the base case.....120

จุฬาลงกรณ์มหาวิทยาลัย
CHULALONGKORN UNIVERSITY

LIST OF FIGURES

Page

Figure 1.1 The framework of circular integration incorporating the ideas of circular economy, industrial ecology, and process integration (Walmsley, 2019). 2

Figure 2.1 Structure of the double pipe heat exchanger (DPHE) (Wang, 2021). 6

Figure 2.2 Structure of the shell and tube heat exchanger (STHE) (Wang, 2021). 6

Figure 2.3 Structure of the coiled tube heat exchanger (CTHE) (Wang, 2021). 7

Figure 2.4 The common structure of the fin used in PFHE (Wang, 2021). 8

Figure 2.5 PCHE with zigzag channels (Wang, 2021). 9

Figure 2.6 Structure of the scraped surface heat exchanger (SSHE) (Wang, 2021)...10

Figure 2.7 Structure of the spiral plate heat exchanger (SPHE) (Wang, 2021). 10

Figure 2.8 HENS hot and cold stream composite curves (Short and Isafiade, 2021).12

Figure 2.9 Two-stage network superstructure (Yee, 1990). 13

Figure 2.10 Additional equations for heat exchanger synthesis (Frausto-Hernández, 2003). 14

Figure 2.11 Additional variables for non-isothermal mixing at stage k (Huang, 2012). 15

Figure 2.12 Example of network from one hot stream and two cold streams (Huang, 2012). 15

Figure 2.13 Illustrative application of the new superstructure where red circle is hot utility, blue circle is cold utility (Pavão, 2018).....16

Figure 2.14 Shell and tube heat exchanger design with DAE (Kazi, 2021a). 17

Figure 2.15 New approximation for LMTD calculation (Kazi, 2021b).....17

Figure 2.16 Best network results for this study (Kazi, 2021a). 19

Figure 2.17 The optimization of TAC for nine examples (Chang, 2022).....23

Figure 2.18 Example of combined heat and mass exchanger network (Isafiade and Short, 2019).....26

Figure 3.1 The example 1 without HEN. 28

Figure 3.2 The example 2 without HEN. 29

Figure 3.3 The example 3 without HEN. 30

Figure 3.4 The example 4 without HEN. 31

CHULALONGKORN UNIVERSITY

Figure 3.5 The flowchart of two-step model of HENS with detailed designs. 35

Figure 3.6 The Aspen Plus simulated process flow diagram of LAES-SAP processes (Wu, 2022). 36

Figure 3.7 The tuning GAMS model for HENS. 41

Figure 3.8 The flowchart of two step designs for the challenging case study. 47

Figure 4.1 Minimum-cost heat exchanger network synthesis from step 1 calculation for example 1. 54

Figure 4.2 Minimum-cost heat exchanger network synthesis from step 1 calculation for example 2. 60

Figure 4.3 Minimum-cost network synthesis from step 1 calculation for example 3 (initially). 66

Figure 4.4 Minimum-cost HENS from step 1 calculation for example 3 (1st updating). 72

Figure 4.5 Minimum-cost HENS from step 1 calculation for example 4 (initially)...80

Figure 4.6 Minimum-cost HENS from step 1 calculation for example 4 (1st updating). 86

Figure 4.7 Minimum-cost HENS from step 1 calculation for example 4 (2nd updating). 92

Figure 4.8 Minimum-cost network of HENS from step 1 calculation.....100

Figure 4.9 Minimum-cost network of HENS after 1st updating. 107

Figure 4.10 Minimum-cost network of HENS after 2nd updating.....114

จุฬาลงกรณ์มหาวิทยาลัย
CHULALONGKORN UNIVERSITY

CHAPTER 1
INTRODUCTION

Heat exchangers are important device and usually used in many industrial plants that require to recover and reuse the waste heat to change the temperature of the streams instead of releasing the heat without benefit. One thing to be aware is the types of heat exchanger because each heat exchanger is suitable to a different tasks or process, so selection of the heat exchangers must be considered about their thermal design, material selection, manufacturing cost and operating cost management. There are 7 types of common heat exchangers (Wang, 2021) that are double pipe heat exchanger, shell and tube heat exchanger, coiled tube heat exchanger, plate heat exchanger, printed circuit heat exchanger, scraped surface heat exchanger, and spiral plate heat exchanger. However, the most popular heat exchanger is shell and tube heat exchangers which account for more than half of all heat exchangers due to good heat transfer from large contacted surface area and reasonable costs for manufacture and operation.

Nowadays, the trend of energy conservation continues to be popular, due to sustainable development approach which is a development model that focuses on sustainability goals that do not cause negative effects on society and the environment or have the least effect on enhancing economy. So, we can follow sustainable development to conserve energy, improve efficiency, save the environment by reducing the emission, and solve the global warming problem. Another trend to support the energy conservation is circular integration that applies the closed-loop material systems concept to reduce the resource and energy consumption for the sustainable production of the product in industrial operation and consists of process integration, industrial ecology, and circular economy (Walmsley, 2019). Many industrial processes can reduce energy consumption by using heat exchanger with counter current flow for constant driving force purpose to transfer the heat from hot streams to cold streams instead of using hot or cold utilities to change the stream temperature to desired temperature directly that require energy and increase the cost for the operation. So, this process of heat integration is called heat exchanger network

จุฬาลงกรณ์มหาวิทยาลัย
Chulalongkorn University

synthesis (HENS) that is the best choice to apply in many plants which need to deal with energy consumption to save cost, energy, environment and so on.

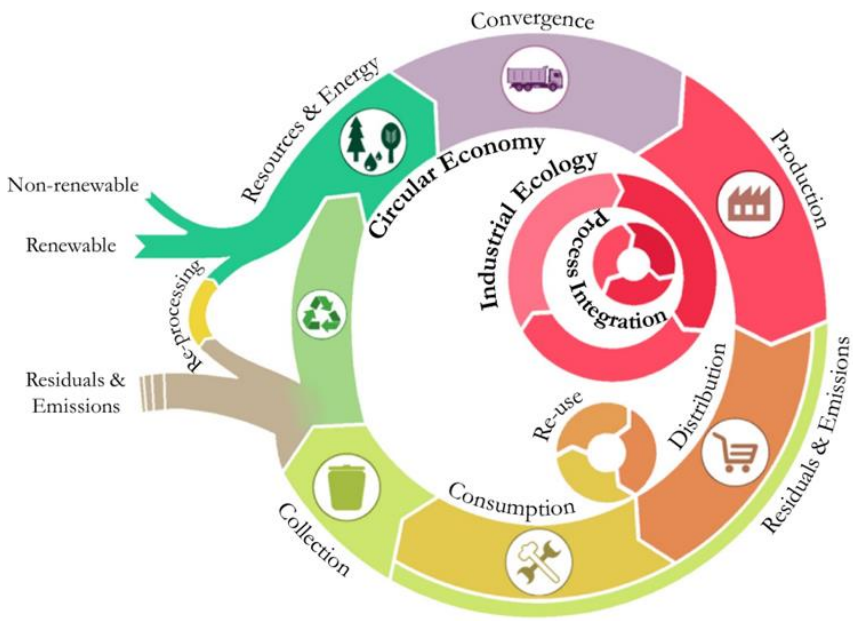

Figure 1.1 The framework of circular integration incorporating the ideas of circular economy, industrial ecology, and process integration (Walmsley, 2019).

The first HENS was developed by using the Pinch Technology (PT) to sequentially optimize the network (Linnhoff and Hindmarsh, 1983). Next, the new model using mathematical programming that is called stage-wise superstructure (SWS) model was introduced to solve the Pinch Technology problem by simultaneous optimization the heat exchanger network (Yee, 1990). The SWS model can optimize the network and minimize the TAC, but some designed networks cannot be used in the real industry because they contain only heat duty and area for exchanger that does not include specific parameter for sizing of heat exchangers such as tube length, tube diameter, heat transfer coefficient, velocity of fluid, etc. Furthermore, SWS model was brought to research more by Frausto-Hernández (2003) that developed the SWS model by considering pressure drop for shell side and tube side of heat exchanger and added it into total annual cost to fulfil the expenses of a network. Then, non-isothermal mixing (Huang, 2012) was represented by deletion the assumption of isothermal mixing after the split streams come out from heat exchangers at the same

stage of superstructure and this concept maybe increase the reality of the network. Pavão (2018) applied substages, sub-splits and cross flows with the SWS model to make the possibility of matching between hot streams and cold streams increasingly and this new structure can place the utilities choice more than the default SWS model. In the present time, Kazi (2021a) introduced SWS model with the detailed designs for individual shell and tube heat exchanger which have many design variables such as number of tubes, shell diameter, tube diameter. Some recent research considers about design variables only such as Chang (2022)'s work, but this work go into more detail of shell and tube heat exchangers than previous work, however, they require the first data of inlet and outlet temperature, flow rate of streams before doing the research. In addition to HEN, there is another network that call mass exchanger network and can use together with heat exchanger to become combined heat and mass exchanger network (CHAMEN). For example, Isafiade and Short (2019) adapted solar energy, a kind of renewable energy, with CHAMEN to find the optimal network of ammonia process. Nevertheless, mass exchanger networks hardly perform in general processes because the mass transfer of the rich streams and lean streams must be couple of specific substances.

As mentioned above, the possibility of using HEN in industrial plants are significantly high, so HENS problem is still challenging to design the best network that trade-off between operating cost and capital investment cost such as external utilities cost and number of heat exchangers respectively. Next, the detailed design for each shell and tube heat exchanger should be simulation after HEN is established too, then we are necessary to optimize the HEN to obtain simple algorithm model which can apply with any processes and confirm that we get the practical network with minimized TAC. For instance, the LNG (liquified natural gas) cold energy transfer process to be re-gasified before transportation to urban locations requires the amount of heat duties to change temperature and phases from a liquid phase to a vapor phase by using heat exchangers for conservation of energy and saving the environment purpose. So, HENS is appropriate to determine the network that is minimized TAC of the re-gasified LNG process for economic maintenance.

Thereby, the objectives of this research are to apply mixed-integer non-linear programming (MINLP) approach to develop stage-wise superstructure (SWS) model

of heat exchanger networks and to bring the information from SWS model to design the detail of each shell and tube heat exchanger. Then, the area cost and pumping cost are corrected from detailed design models to SWS model, the variables from the detailed design are updated to SWS model and repeat the simulation again until discovering the best designed networks as procedures in flowchart. Finally, we aim to compare and overcome the total annual costs (TAC) from the case studies of previous research.

จุฬาลงกรณ์มหาวิทยาลัย
CHULALONGKORN UNIVERSITY

CHAPTER 2
LITERATURE REVIEW

2.1 Types of Heat Exchangers

7 types of heat exchangers are described by Wang (2021) which include double pipe heat exchanger, shell and tube heat exchanger, coiled tube heat exchanger, plate heat exchanger, printed circuit heat exchanger, scraped surface heat exchanger, and spiral plate heat exchanger. Table 2.1 is the conclusion in their characteristic features of each heat exchanger type.

2.1.1 Double Pipe Heat Exchanger

Two concentric circular pipes are made up to be a double pipe heat exchanger (DPHE). The outer pipes are larger in diameter than the inner pipes, and the flow zones are the inner tube pass and the annulus pass. Inside a DPHE, the major heat transfer path is through the inner pipe's wall. The pipes are frequently U-turned to enhance the heat transfer area in a restrictive space as shown in Figure 2.1, and U-turned DPHEs may transport heat with a temperature of the ambient (when the temperature at U-bent is greater than the ambient temperature). The DPHE might be combined in series or parallel to meet needs due to the structure's simplicity. DPHE, as the most basic tubular heat transfer invention, has a smaller heat transfer area than other tubular heat exchangers. Typical DPHEs are used to doing minor tasks in an assignment. The most obvious technique to improve heat transfer performance is to lengthen the pipe. Longer pipes, on the other hand, result in increased pressure drop, material costs, and operational costs. Because of their simple structure, DPHEs are appropriate for high-fouling or high-viscosity environments. Finned-tube DPHEs are a modified heat transfer improvement for DPHEs compared with original DPHEs that are constructed with smooth pipes.

CHULALONGKORN UNIVERSITY

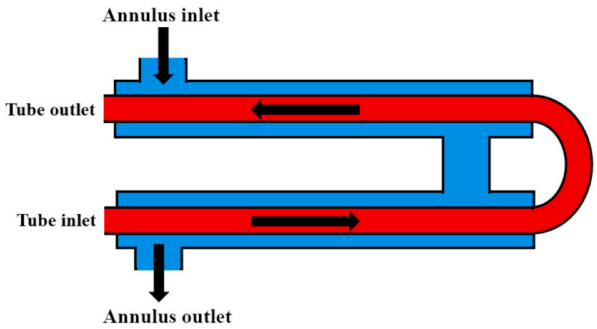

Figure 2.1 Structure of the double pipe heat exchanger (DPHE) (Wang, 2021).

2.1.2 Shell and Tube Heat Exchanger

The shell and tube heat exchanger (STHE) is a significant and commonly utilized heat transfer device, accounting for more than half of all heat exchangers. STHEs are the preferred solution for many applications due to their well-developed design rules and global manufacturing standards. The sturdy internal design improves adaptability for various applications while also making maintenance and upgrades easier. The shell, tube bundle, baffles, front head, rear head, and nozzles are the key components of a STHE. Segmental baffles are used in original STHEs to create the zigzag flow pattern. Because the main flow is regularly twisted and continuous vertical striking the tube bundle, this flow pattern has benefits in local mixing and heat transfer intensification. The zigzag flow, on the other hand, causes a large pressure drop, stagnant zones, and damaging vibrations. These flaws significantly raise operating costs (due to high pump work demands) and reduce asset lifespan. As a result, during the service duration, frequent interior cleaning and maintenance is necessary. To address the STHE's inherent shortcomings, several contributions have been made to improve both its performance and structure.

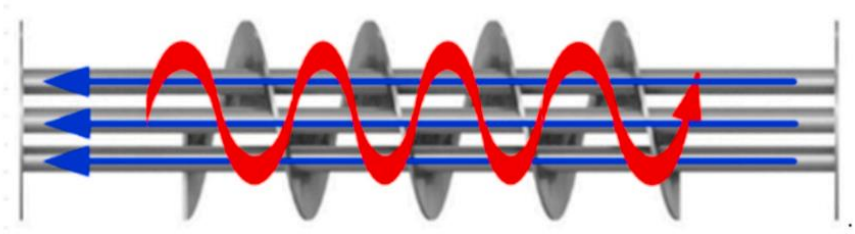

Figure 2.2 Structure of the shell and tube heat exchanger (STHE) (Wang, 2021).

2.1.3 Coiled Tube Heat Exchanger

The coiled tube heat exchanger (CTHE) is distinguished by the huge number of tubes that are twisted in a helix around the center tube as seen in Figure 2.3. The tubes feature a multilayer structure and are typically low in diameter. As long as the tubes are gathered from the surface of the central tube, the direction of enwinding is unrestricted. This versatility in tube architecture allows for the integration of many tube-side fluids into a single shell side. The helically coiled tube heat exchanger is the most prevalent form of CTHE due to its compact design, ease of fabrication, and heat transfer efficiency. Because of the tiny widths of the tubes and the several layers, pass configurations may be designed in a variety of ways. The heat transfer performance of the CTHE is enhanced as compared to traditional tubular HEs with straight tubes, thanks to the secondary flow, which improves local fluid mixing and reduces the thickness of the thermal barrier layer. Due to the tiny diameter, chemical cleaning is the only option, since mechanical cleaning is insufficient in such a small space.

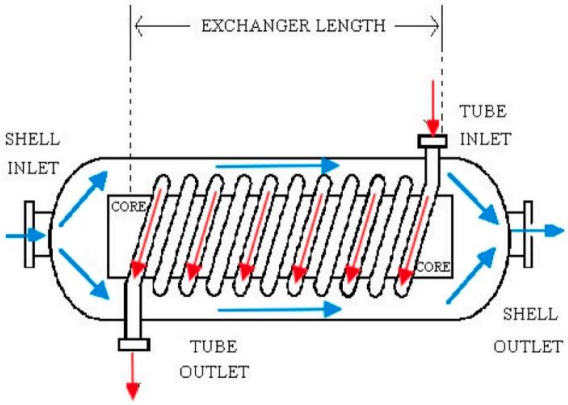

Figure 2.3 Structure of the coiled tube heat exchanger (CTHE) (Wang, 2021).

2.1.4 Plate Heat Exchanger

Although less widespread than tubular heat exchangers, plate heat exchangers (PHE) have been widely employed in various sectors, and their distinctive construction and features remain unrivaled. The Plate and Frame Heat Exchanger (PFHE) is the prototype for many PHEs. A PFHE is made up of several heat transfer plates, fixed frames, carrying bars, and other supporting components. The heat

transfer plates are securely clamped in a fixed frame to produce a multi-layered structure that allows more fluid to move through in a small device volume. Surface modification of heat transfer plates is popular to form fluid channels and improve heat transfer. Each plate features four perforations on the edge ends that act as inlets and exits for the fluid flow. Gaskets are sealed into the grooves on the plate's perimeter. Gaskets provide appropriate leak proofing since the plates are secured by the frame. Although gasket failure may not cause fluid mixing, it will cause leakage and pressure drop. PHEs outperform STHEs in various ways, including compactness, low cost, and structural modification flexibility due to the ability to modify the number of plates. Because of the construction and manufacturing process, the pressure resistance of PHEs is lower than that of STHEs, and modern PHEs are frequently provided with improved fins to meet the needs and increase compactness.

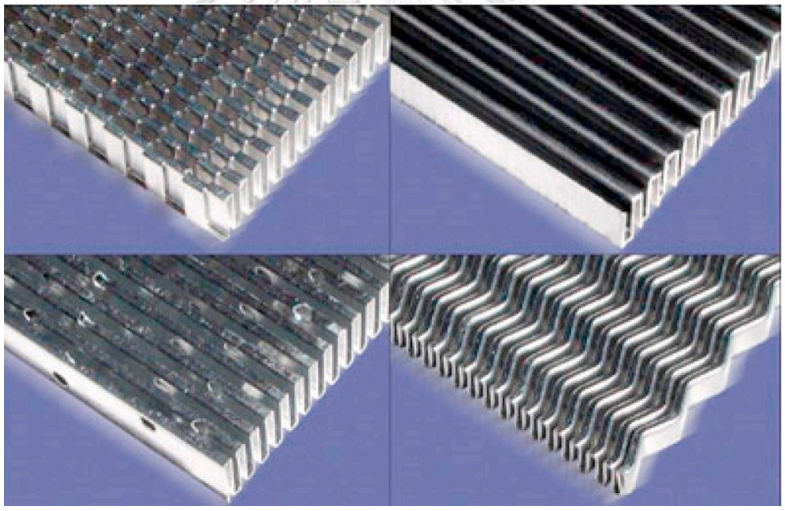

Figure 2.4 The common structure of the fin used in PFHE (Wang, 2021).

2.1.5 Printed Circuit Heat Exchanger

A multilayer printed circuit heat transfer plate is used to produce the Printed Circuit Heat Exchanger (PCHE), and the printed circuit heat transfer plates are integrated via diffusion bonding. Photochemical etching is used to prepare the flow passageways in the PCHE, which achieves more refined processing than machining. The channel arrangement of the plates for different working fluids is controlled by operating circumstances, although sophisticated processing technologies provide diversity and complexity to designs as displayed Figure 2.5. PCHE has

several intrinsic benefits due to the combination of photochemical etching and diffusion bonding, including great compactness, outstanding pressure and temperature endurance, and high heat transfer area density. The bulk of diffusion-bonded HEs are built of 300 series austenitic stainless steel due to the applications and fabrications of PCHEs. Other metals, such as 22 chrome-duplex, copper-nickel, nickel alloys, and titanium, are well-suited to the diffusion-bonded method. PCHEs are often used at high parameter or supercritical settings with carbon dioxide and helium media because to their peculiar properties.

Chulalongkorn University

Figure 2.5 PCHE with zigzag channels (Wang, 2021).

2.1.6 Scraped Surface Heat Exchanger

The scraped surface heat exchanger (SSHE), sometimes called as a scraped wall heat exchanger, is particularly well suited to heat transfer processes involving high viscosity fluids, fouling, or crystallization. This is due to the scraping motion, which avoids fouling and ensures that mixing and heat transfer are maintained. The fluids are axially forced into the annulus by the pressure difference gradient in an SSHE, which comprises mostly of a cylindrical annulus flow area. Scraper blades are frequently used to scrape the annulus wall surface, that is driven by the central rotor as shown in Figure 2.6 and different blade layouts improve heat

transfer performance outcomes. As previously stated, SSHEs are typically utilized in extremely viscous fluid conditions such as Poiseuille flow and Taylor–Couette flow, since the scraping action efficiently cleans the wall and provides an externally generated push to keep the heat transfer process progressing.

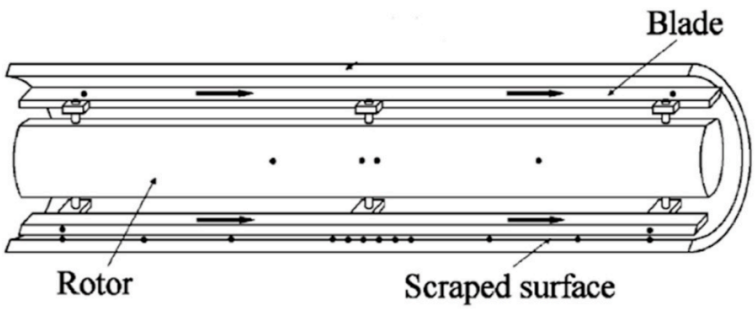

Figure 2.6 Structure of the scraped surface heat exchanger (SSHE) (Wang, 2021).

2.1.7 Spiral Plate Heat Exchanger

A spiral plate heat exchanger (SPHE) is another typical heat exchanger. Unlike the previously described plate heat exchangers (PHE), spiral plate heat exchangers are mainly composed of several spiral heat transfer plates, as opposed to flat plates in traditional plate heat exchangers as seen in Figure 2.7. The flow channels are built by neighboring plates, similar to plate heat exchangers, and the heat transfer process occurs through the plate wall.

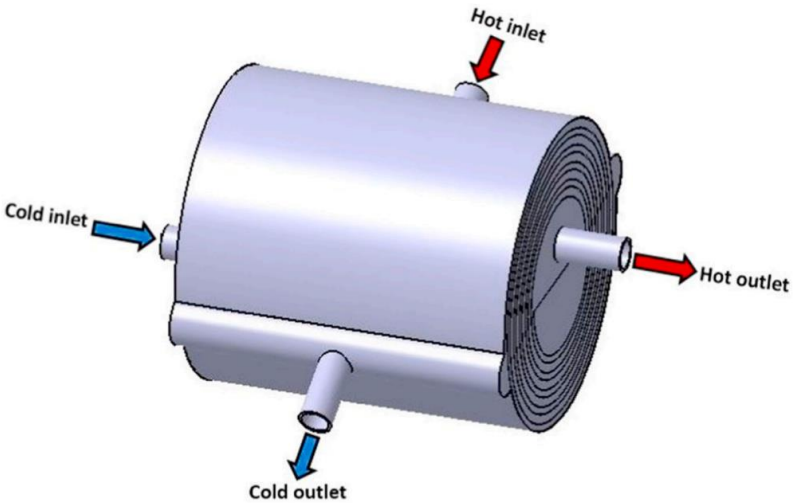

Figure 2.7 Structure of the spiral plate heat exchanger (SPHE) (Wang, 2021).

Table 2.1 Summary features and specialties of each heat exchanger types (Wang, 2021)

Heat exchanger types	Features
Double pipe heat exchanger (DPHE)	Straightforward construction; limited heat transfer area; small duties; suitable for high-fouling or high-viscosity working fluids
Shell and tube heat exchanger (STHE)	The most popular HE types; zigzag flow pattern leads to tube vibration and stagnant zones; suitable for most working fluids
Coiled tube heat exchanger (CTHE)	Small diameter heat transfer tubes with the strong secondary flow; compact design; hard to clean and maintain; avoid fouling/high viscosity fluids
Plate heat exchanger (PHE)	Strong compactness; various structure modification; poor pressure resistance; easy fouling
Printed circuit heat exchanger (PCHE)	Extreme compactness; excellent pressure and temperature endurance; applied in high-parameter or supercritical conditions
Scraped surface heat exchanger (SSHE)	Engine-driven scraping motion; suitable for high viscosity, fouling or crystallization-prone fluids
Spiral plate heat exchanger (SPHE)	Multi-layered spiral plates; self-cleaning effect; suitable for tough process conditions

จุฬาลงกรณ์มหาวิทยาลัย
CHULALONGKORN UNIVERSITY

2.2 Pinch Technology (PT) Model

The Pinch Technology (PT) approach was introduced where targets were set to maximize heat recovery, minimize utilities, minimize the number of stream matches, or minimize exchanger areas (Linnhoff and Hindmarsh, 1983). The network is then designed to come the closest to the goals by finding thermodynamic bottlenecks, also known as pinch points by formulate the composite curve between hot streams and cold streams that can inform about minimum hot utilities, minimum cold utilities, and maximum heat recovery at determined minimum temperature

difference. Then, the next target was simultaneous optimization of the trade-offs of operating cost and capital investment cost by formulation of the mathematical programming.

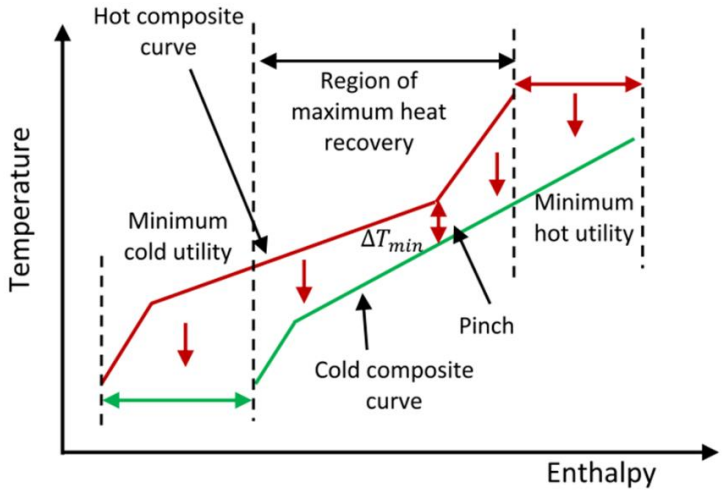

Figure 2.8 HENS hot and cold stream composite curves (Short and Isafiade, 2021).

2.3 First Stage-Wise Superstructure Model

The stage-wise superstructure (SWS) model was developed to synthesize HEN more convenient than the old approach by using general algebraic modeling system or GAMS that was famous in optimization research study field (Yee, 1990). The model was solved as mixed-integer non-linear programming (MINLP) which include non-linear equations, binary variables, basic heat transfer equation, and logical constraints for approach temperature in the model and utilities located at the extreme end of the networks. The binary variables that firstly introduce in this model for HENS's field can use to determine the topology of network, location of heat exchanger and utilities between hot streams and cold streams, govern by the assumption of isothermal mixing after the streams exit from heat exchanger. In addition, the advantages of this model are no requiring to set minimum temperature difference before optimization as Pinch Technology approach and can find area for exchanger while the old model cannot. In this model, they used approximate logarithm mean temperature difference (LMTD) to avoid the numerical issues (Chen, 1987) then utilities cost, exchanger area, and streams matching are optimized simultaneously with the objective function of

minimizing the TAC that consist of annual operating cost, area cost, and investment cost. Moreover, this work was the fundamental base for the further literature related to HENS.

Objective function

$$min\left[\sum_{i\in H} CUCqc_i + \sum_{j\in C} HUCqh_j + CF\left(\sum_{i\in H}\sum_{j\in C}\sum_{k\in K} z_{i,j,k} + \sum_{i\in H} zcu_i + \sum_{j\in C} zhu_j\right)\right.$$
$$+\sum_{i\in H}\sum_{j\in C}\sum_{k\in K} AC\left(\frac{q_{i,j,k}}{(U)(LMTD_{i,j,k})}\right)^{AE} + \sum_{i\in H} AC\left(\frac{qc_i}{(U_i)(LMTD_i)}\right)^{AE}$$
$$\left.+\sum_{j\in C} AC\left(\frac{qh_j}{(U_j)(LMTD_j)}\right)^{AE}\right] \tag{2.1}$$

From the above equation (2.1), the first and second term are utility cost of cold and hot utility respectively. The third term is fixed cost that calculates from summation of binary variables and consists of fixed cost for heat exchanger, cold utility, and hot utility respectively. The final three terms are area costs for heat exchanger, cold utility, and hot utility respectively. The basic diagram from this work shows all possibility of stream matching for hot streams and cold streams with counter-current pattern.

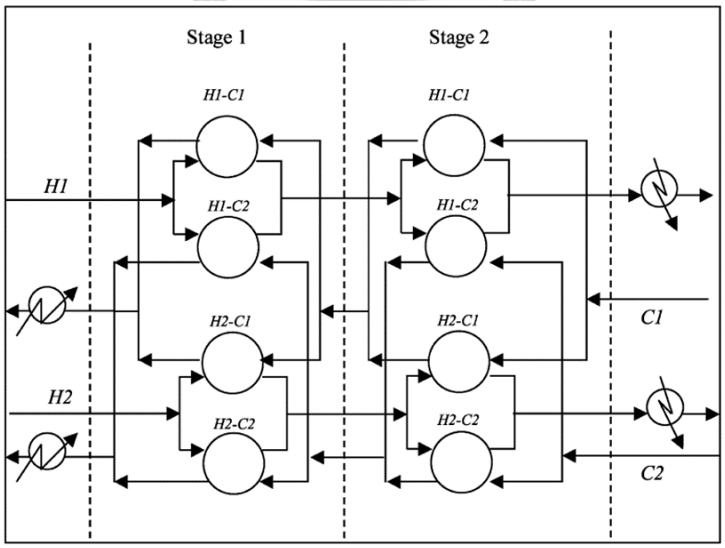

Figure 2.9 Two-stage network superstructure (Yee, 1990).

2.4 Another Stage-Wise Superstructure Model

The stage-wise superstructure have developed since 1990 (Yee, 1990) and the variant of HENS have published tremendously by including a new feature, or remove existing assumptions from the first model. For instance, stage-wise superstructure that considered effect of pressure drop in TAC was developed in 2003 (Frausto-Hernández, 2003). The detail of another stage-wise superstructure model will be described further as chronological order.

2.4.1 SWS Model with Pressure Drop

This model considered pressure drop and its cost to fill their effects in MINLP HEN and neglected previous assumption of constant film heat transfer coefficients (Frausto-Hernández, 2003). The main target of their work was synthesis the networks that satisfy not only minimum TAC but also pressure drop cost. In this work, they used relationship of friction pressure drop to convective film heat transfer coefficients and heat transfer area for turbulent flow regime with shell and tube heat exchanger. Then the model will include more nonlinearities from these equations. Finally, they can calculate the pumping power cost from the product of cost coefficient CW, volumetric flowrate Q, and pressure drop ΔP of streams.

$$\Delta P_{\mathrm{T}} = K_{\mathrm{PT}} A h_{\mathrm{T}}^{3.5}$$

$$\Delta P_{\mathrm{S}} = K_{\mathrm{PS}} A h_{\mathrm{S}}^{5.109}$$

$$\text{Cost of Power} = CWQ\Delta P$$

$$K_{\mathrm{PT}j} = \left(\frac{67.062\phi_j^{6.109}}{g_{\mathrm{c}}}\right)\left(\frac{L - D_{\mathrm{t}}}{D_{\mathrm{t}}}\right)\left(\frac{L D_{\mathrm{e}}^{1.109}\mu_j^{1.297}}{F_j \rho_j k_j^{3.406} Cp_j^{1.703}}\right)$$

$$K_{\mathrm{PS}i} = \frac{\phi_i^{4.5} D_i^{1/2} \mu_i^{11/6}}{(0.023)^{2.5} g_{\mathrm{c}} F_i \rho_i k_i^{7/3} Cp_i^{7/6}}$$

Figure 2.10 Additional equations for heat exchanger synthesis (Frausto-Hernández, 2003).

2.4.2 SWS Model with Non-Isothermal Mixing

This model was removed the assumption of isothermal mixing and they thought that MINLP HEN with non-isothermal mixing may gave superior network (Huang, 2012). They introduced new variables to split parent stream that are called fractional flow of hot stream or f_{ijk} and cold stream or g_{ijk} along with their constraints.

Moreover, they can determine the temperature drop or TD_{ijk} after coming out of heat exchanger for each sub hot streams and temperature rise or TR_{ijk} for sub cold streams to find out the final non-isothermal mixing temperature at that stage. In this design, the stream that came out from heat exchangers can mix together before went to next heat exchanger that did not go straight to last stage as Yee and Grossmann's work, so this increased probability to match the stream.

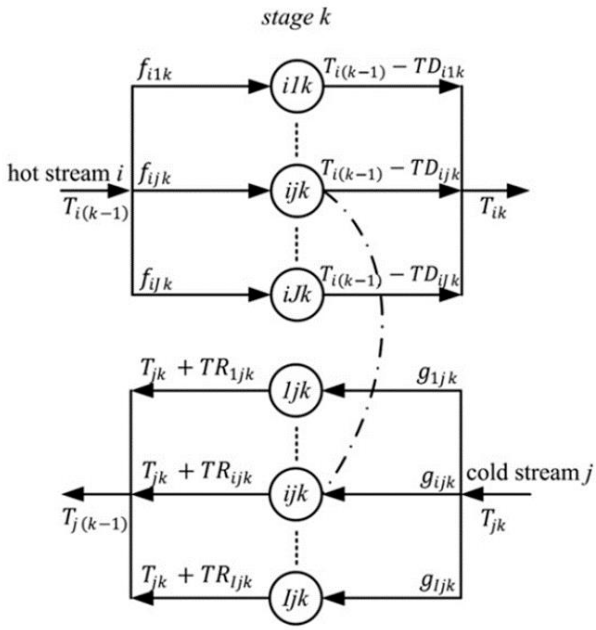

Figure 2.11 Additional variables for non-isothermal mixing at stage k (Huang, 2012).

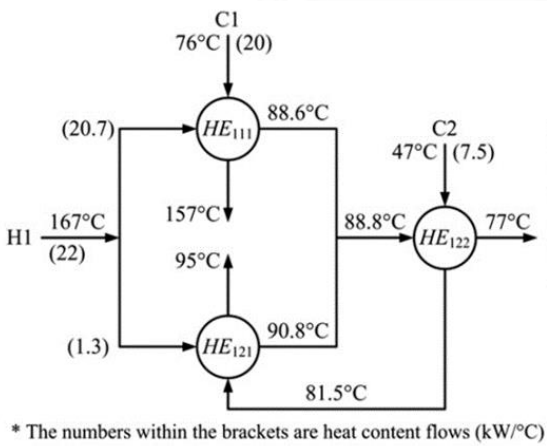

Exchanger	Heat load (kW)	Area (m^2)
HE_{111}	1620	143.8
HE_{121}	101.3	6.5
HE_{122}	258.7	32.1
Total		182.5

Annualized utility cost = $0
Investment = $76,327
Total annualized cost = $76,327

Figure 2.12 Example of network from one hot stream and two cold streams (Huang, 2012).

2.4.3 SWS Model with Substages, Sub-Splits and Cross Flows

This model was added specific indexes for hot utilities, cold utilities, hot sub-stream, cold sub-stream, and substage to MINLP HEN, so this structure can place the utilities at the end of substages instead of placing utilities at the very end of mainstream and increase possibility to search stream matching place that make the problem more complex (Pavão, 2018). In addition, this work contained cross flow that stream branches can be partially mixed between the substage and enabled additional temperature manipulation to flexibly design the network.

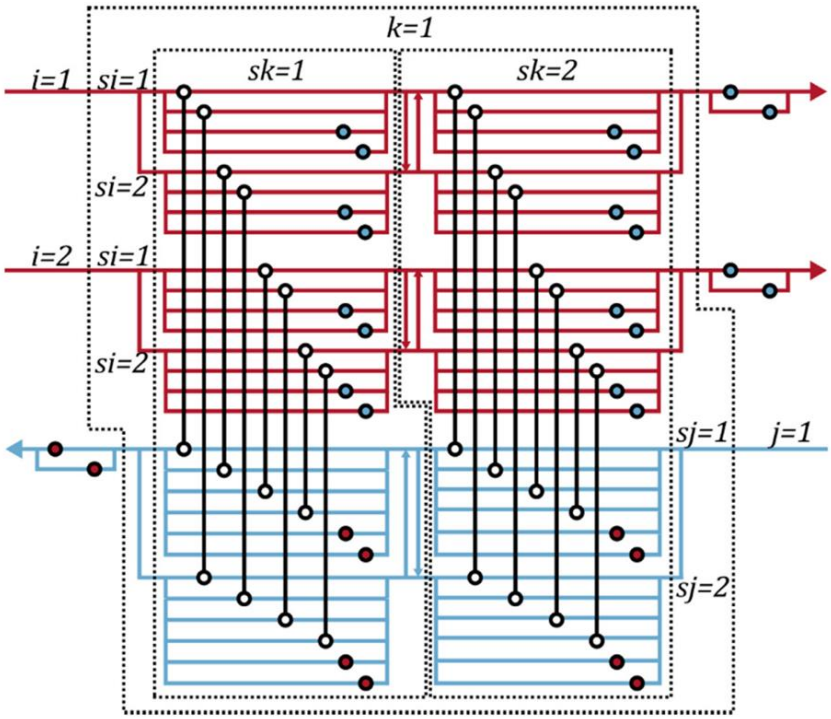

Figure 2.13 Illustrative application of the new superstructure where red circle is hot utility, blue circle is cold utility (Pavão, 2018).

2.5 The Newest SWS Model with Detailed Design

The newest trend for HENS was described in the literature of this year (Kazi, 2021a). They developed MINLP HEN by including pumping cost from pressure drop, non-isothermal mixing constraints, bypasses constraints, and the most interesting is individual design for heat exchangers. In this design, they used differential-algebraic equation or DAE with finite element to design the variables for each shell and tube

heat exchanger such as overall heat transfer coefficient from full equation with contains stream thermal conductivity and Resistance on both sides, pressure drop for both sides, and number of shell and tube passes. Many studies considered one shell pass and one tube pass in the design of heat exchanger to reduce the pressure drop as low as possible. However, this design will make low velocities, high fouling that are not preferred in industry. Then they designed more than one shell or tube pass in this work. Furthermore, this work applied a new approximation to calculate logarithm mean temperature difference or LMTD (Kazi, 2021b) that very accurate close to the original equation, so we will obtain the real value of heat exchanger areas to estimate the area costs correctly.

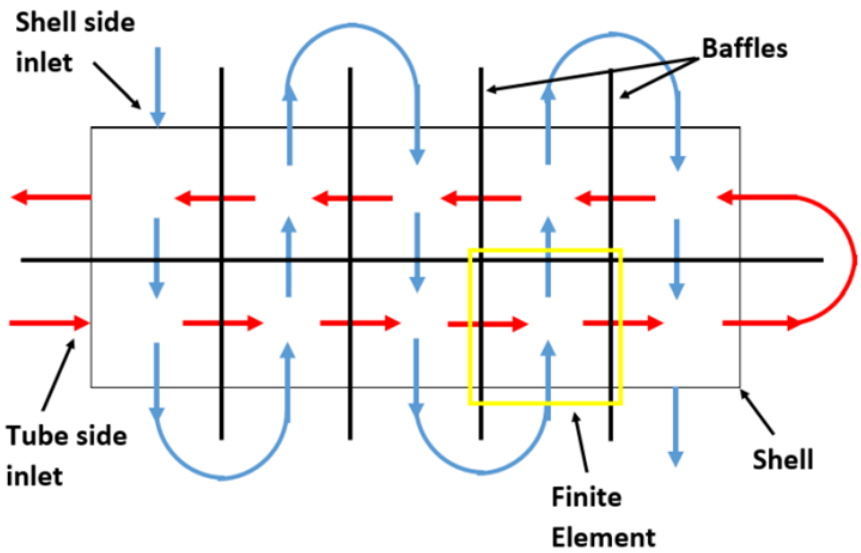

Figure 2.14 Shell and tube heat exchanger design with DAE (Kazi, 2021a).

$$LMTD_{i,j,k} = dt_{i,j,k}((\alpha - 1)^2 + \epsilon)^{1/2}/(ln(\alpha)^2 + \epsilon)^{1/2}$$

$$\text{the approximation } |\xi| \simeq (\xi^2 + \epsilon)^{1/2} \qquad 0 < \epsilon << |\xi|$$

$$\alpha = dt_{i,j,k+1}/dt_{i,j,k}$$

Figure 2.15 New approximation for LMTD calculation (Kazi, 2021b).

The results of TAC comparison are shown in Table 2.2 (Kazi, 2021a) of this work that are divided into utility costs, area costs, pumping costs, and fixed costs. In this work, they used one thousand dollar per number of exchangers that included all

shell of heat exchangers and utilities, sixty dollar per kW-year for hot utility, six dollar per kW-year for cold utility, one point three for pumping power cost coefficient, sixty for area cost coefficient, and zero point six for area cost exponent. The figure below shows the best solution network of this work for 3 hot streams and 3 cold streams, they obtained five matches and only one hot utilities for both bypass and without bypass case, but they found the minimum TAC in bypass cast compared to all previous studies.

Table 2.2 Summary of total annual cost in comparison with other studies (Kazi, 2021a)

	Without Bypass	With Bypass	Kazi (2021b)	Mizutani (2003)	Ravagnani and Caballero (2007)
Total annual Cost ($/a)	74,217.37	73,845.71	76,686.29	190,532	74,165.48
Utility Cost ($/a)	46,200	46,200	46,200	173,456	46,200
Area Cost ($/a)	8,135.85	8,621.58	8,410.50	3,388	13,887.57
Pumping Cost ($/a)	9,509.85	9,024.12	13,075.79	17,076	2,077.91
Fixed Cost ($/a)	10,000	10,000	9,000	9,000	11,000
Number of matches	5	5	5	6	6
Number of exchangers	10	10	9	9	11

จุฬาลงกรณ์มหาวิทยาลัย
Chulalongkorn University

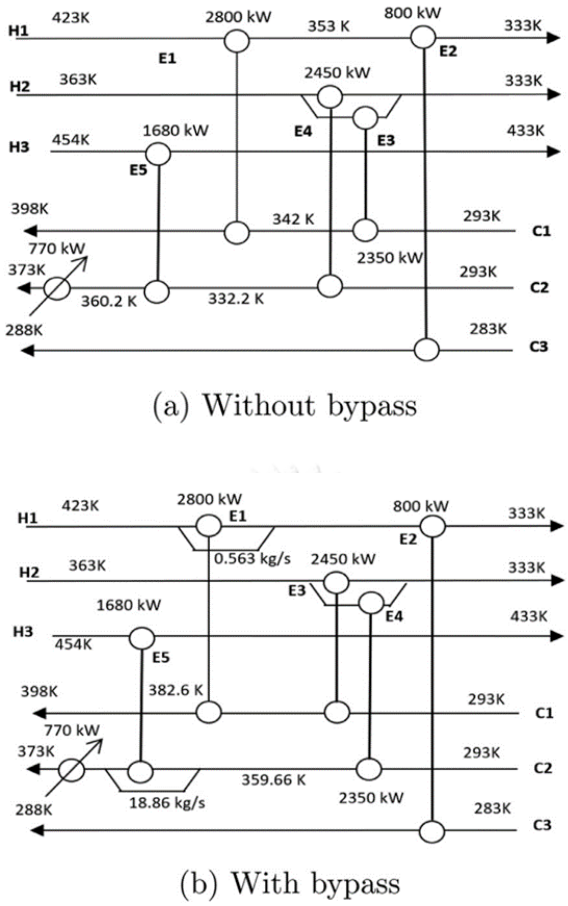

Figure 2.16 Best network results for this study (Kazi, 2021a).

The Table 2.3 (Kazi, 2021a) shows all variables in the detail design of heat exchanger such as tube pitch, shell diameter, tube length, and fluid velocities. Many studies always report heat duty and area of heat exchanger only with fix overall heat transfer coefficient to constant, some studies consider and report the pressure drop. But this work uses properties of streams with heat transfer equations to find fluid velocities and Reynolds number then calculate Nusselt number from Prandtl and Reynolds number after that they obtain convective heat transfer coefficients for two sides. Next, finding the overall heat transfer coefficient by considering resistance of both sides. Finally, they can bring out friction factor and pressure drop of two sides from design variables that will give minimum total annual cost.

Table 2.3 Detail design for each heat exchanger (Kazi, 2021a)

	Exchanger 1	Exchanger 2	Exchanger 3	Exchanger 4	Exchanger 5
Area (m^2)	399.4	44.1	193.0	159.2	31.4
Duty (kW)	2800	800	2450	2350	1680
N_{tp}	4	1	2	6	2
NS	4	1	2	1	1
D_s (m)	0.70	0.84	0.61	0.84	0.53
N_t	822	488	442	1310	162
N_b	5	2	5	3	4
d_o (mm)	15.88	21.2	19.05	15.88	21.2
d_i (mm)	13.24	25.4	15.88	13.24	25.4
p_t (mm)	19.84	31.75	23.81	19.84	31.75
L (m)	2.438	1.13	3.658	2.438	2.438
v_s (m/s)	0.454	0.404	0.431	0.376	0.752
v_t (m/s)	1.137	0.598	1.201	1.676	1.81
h_s ($W/m^2.K$)	1161	765	1039	1046	1240
h_t ($W/m^2.K$)	1628	886	1641	2221	2149
U ($W/m^2.K$)	500	324.7	505.2	527	561
ΔP_t (kPa)	62.2	0.622	19.2	49.9	14.4
ΔP_s (kPa)	44.1	2.41	14.5	6.09	11.9
Hot fluid allocation	Shell	Shell	Shell	Shell	Shell

2.6 The Only Detailed Design Model for Heat Exchangers

Some of the new researches are considering the detailed design for heat exchangers only, so the objective function of this kind of work is to minimize the total annual costs (TAC) that merely consist of area costs and pumping costs. Chang (2022) use Complete Set Trimming approach to design the detail of shell and tube heat exchangers that are more detailed than the work of Kazi (2021a) in the

component of shell and tube heat exchangers and this approach is better than commercial programs that require a lot of time to solve the design problems, or sometimes commercial programs cannot find the solution. There are 13 types of shell and tube heat exchangers in this work (Chang, 2022) that are shown on the Table 2.4 and their area cost coefficient, area cost exponent, and pumping cost coefficient also show in Table 2.5. In this work, they gather 9 examples from Gonçalves (2017) to solve the minimization of total annual cost for every shell and tube heat exchanger types and the results are illustrated in Figure 2.10. However, this kind of work requires data of the heat exchangers from topology design, pinch technology, or mathematical programing such stage-wise superstructure, to design the detail for individual heat exchanger. Therefore, it should generate the topology model first to confirm the exact data of heat exchanger, or find the reliable data from the sources before doing the detailed design.

Table 2.4 The types of shell and tube heat exchanger (Chang, 2022)

Abbreviation	Full name
SB-PT	Segmental Baffle and Plain Tube
SB-TI	Segmental Baffle and tube with Twisted-Tape Insert
SB-CI	Segmental Baffle and tube with Coiled-Wire Insert
SB-IF	Segmental Baffle and Internally Finned Tube
HB-PT	Helical Baffle and Plain Tube
HB-TI	Helical Baffle and tube with Twisted-Tape Insert
HB-CI	Helical Baffle and tube with Coiled-Wire Insert
HB-IF	Helical Baffle and Internally Finned Tube
EF-PT	Externally Finned Tube and Plain Tube

จุฬาลงกรณ์มหาวิทยาลัย
CHULALONGKORN UNIVERSITY

Abbreviation	Full name
EF-TI	Externally Finned Tube and tube with Twisted-Tape Insert
EF-CI	Externally Finned Tube and tube with Coiled-Wire Insert
EF-IF	Externally Finned Tube and Internally Finned Tube
TT	Twisted-Tube heat exchanger

Table 2.5 Cost coefficient for each type of heat exchanger (Pan, 2013)

Heat Exchanger Type	Area Cost Coefficient	Area Cost Exponent	Pumping Cost Coefficient
SB-PT	20.0	0.8	1.31
SB-TI	21.0	0.8	1.31
SB-CI	21.5	0.8	1.31
SB-IF	30.0	0.8	1.31
HB-PT	22.0	0.8	1.31
HB-TI	23.0	0.8	1.31
HB-CI	23.5	0.8	1.31
HB-IF	32.0	0.8	1.31
EF-PT	30.0	0.8	1.31
EF-TI	31.0	0.8	1.31
EF-CI	31.5	0.8	1.31
EF-IF	40.0	0.8	1.31
TT	30.0	0.8	1.31

จุฬาลงกรณ์มหาวิทยาลัย
CHULALONGKORN UNIVERSITY

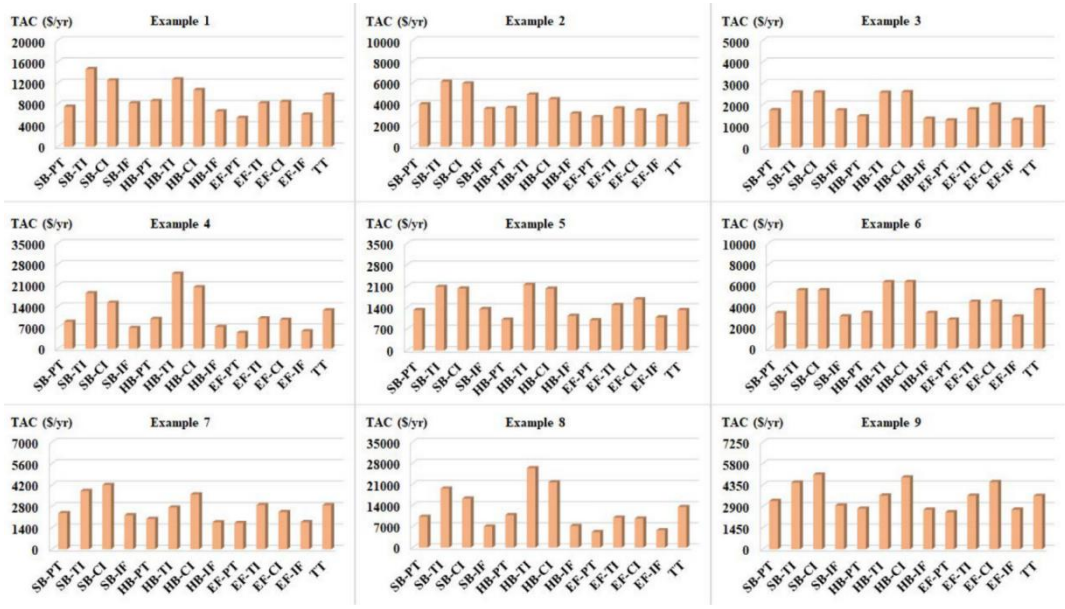

Figure 2.17 The optimization of TAC for nine examples (Chang, 2022).

2.7 Combined Heat and Mass Exchanger Network (CHAMEN)

Besides HENS, there is research about mass exchanger network synthesis with same objective to minimize the TAC too, but mass exchanger network does not have two utility types as HEN does that will be convenient for optimization. Some industries also need mass exchanger network for circular economy purpose (Walmsley, 2019) and work together with heat exchanger network that are called combined heat and mass exchanger network (CHAMEN).

2.7.1 <u>CHAMEN with Regeneration and Renewable Energy</u>

The development of combined heat, mass, and regeneration exchange networks by using solar thermal as hot utility instead of fossil-based hot utility for environmentally friendly purposed was introduced in this section (Isafiade and Short, 2019). They use mixed integer non-linear programming (MINLP) approach and stage-wise superstructure (SWS) model to synthesize the multi-period CHAMEN (combined heat and mass exchange network) and this is the only work that multi-period CHAMEN is optimized. The process in this literature involves the removal of ammonia from the rich stream by using water solvent as mass separating agent (MSA)

with absorption where operate at low temperature, stripping process where operate at high temperature, and regeneration process to recycle the MSA for saving the cost. There are two periods of time in this literature that are period 1 represent the time between 9 am to 6 pm where solar irradiation is available and period 2 represent the time between 6 pm to 9 am where solar irradiation is not available in some location. However, all of examples are not consider about fluctuation of global horizontal irradiation (GHI) and the ambient temperature to avoid the highly non-linear model to become more complex and difficult to solve. So, the GHI and ambient temperature are not constant in the reality and the exit fluid temperature from solar panel will not constant too. So, if the exit fluid temperature too low, we need to add another heat source to obtain the target temperature of the process to working properly.

2.7.1.1 Example 1

This work illustrates 3 examples of the synthesis networks. The first example has three sub-networks which are MEN, HEN, and REN. This is simple example because the REN has only one external MSA and the HEN has one hot process stream and one cold process stream with two hot utilities (fossil-based and solar thermal) and one cold utility. From the model, they varied the cost of fossil-based hot utility and found that using the cost of fossil-based hot utility lower than 815 $/(kW·y) lead to solar thermal less favored. If the cost of fossil-based hot utility is 815 $/(kW·y), they will obtain the total annual cost of $557,079. ($465,994 of annual operating cost and $91,085 of annual capital cost)

จุฬาลงกรณ์มหาวิทยาลัย
Chulalongkorn University

2.7.1.2 Example 2

The second example also has three sub-networks, but it is more complex than first example because it contains five hot process streams and three cold process streams. In this example, the process stream and some parameters have a multi-period profile. (period 1 and 2) They also varied the cost of fossil-based hot utility that are 300, 170, and 150 $/(kW·y). If the cost of fossil-based hot utility is 300 $/(kW·y) then the solar thermal is more favor than fossil-based hot utility, while the cost is 170 $/(kW·y) then both utilities are favor. At the cost of hot utility is 150 $/(kW·y), the fossil-based hot utility is more favor. They found that the lowest total annual cost is obtained at $623,896 when they use the cost of 150 $/(kW·y) for fossil-based hot utility, but the lowest total annual operating cost is obtained at $462,154

when they selected the solar thermal as the only hot utility. (higher annual capital cost because the solar panel, so the total annual cost increase too)

2.7.1.3 Example 3

Finally, the third example is investigated about the economic of the retrofit of existing mass exchanger network by solar enhanced the regeneration of external MSA to maximize the net present value (NPV) and they use the same stream data as example 1. In the model, they set annual operating cost of original network as $308,480, the cost of fossil-based hot utility is 235 $/(kW·y), and annual operating cost of retrofitted network is set as the optimization variable. Next, they studied about sensitivity analysis that is deviation of the cost of regenerant and annual operating cost of MEN only network, at the cost of regenerant is 20,869 ($/y)/(kg/s) and the cost of annual operating cost for MEN only network (AOC) is $308,480, they obtained highly negative NPV of - $648,959. So, they fixed the AOC and reduce the cost of regenerant to 10,000 and 2,500 ($/y)/(kg/s) and found that the NPV come to positive value when the cost of regenerant is 2,500 ($/y)/(kg/s). On the other hand, if they increased the AOC to $608,480 and decreased the cost of regenerant to 17,500 ($/y)/(kg/s), they will obtain the highest positive NPV of $230,043.

จุฬาลงกรณ์มหาวิทยาลัย
CHULALONGKORN UNIVERSITY

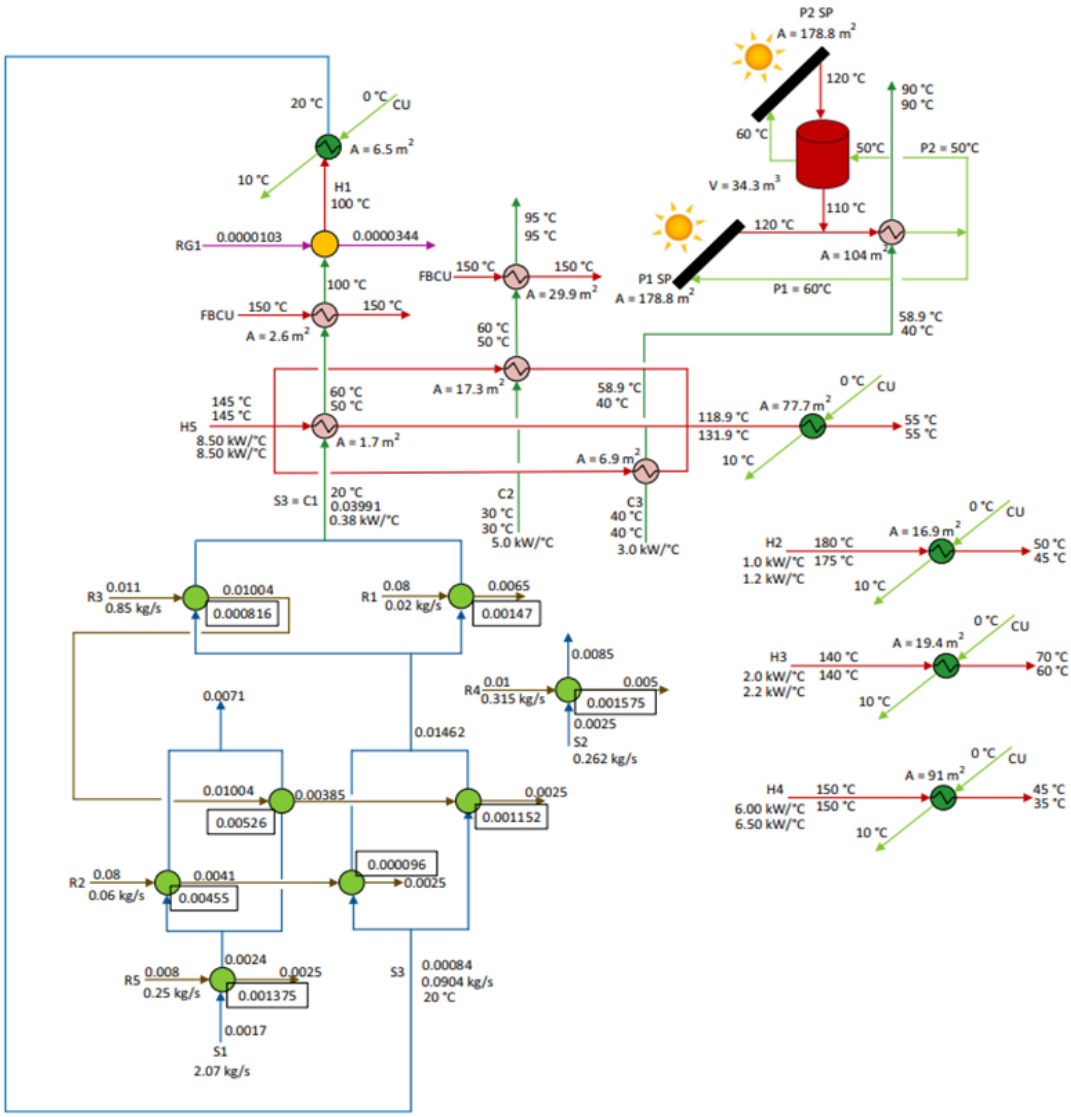

CHULALONGKORN UNIVERSITY

Figure 2.18 Example of combined heat and mass exchanger network (Isafiade and Short, 2019).

CHAPTER 3
EXPERIMENTAL

3.1 Programs and Equipment

3.1.1 Programs

1. GAMS (Rosenthal, 2013)
2. Microsoft Excel
3. Aspen Plus V12.1

3.1.2 Equipments

1. High processing computer
2. GAMS User Guide (Rosenthal, 2013)

3.2 Optimization Procedures of HEN for General Case Studies; Examples 1, 2, 3, and 4

3.2.1 General Case Studies Description

All four examples came from Kazi (2021a) and each example will be more described in the section below. The hot streams and cold streams are the alike, so whole fluid properties are the same and constant. These streams are ideal streams that do not exist in a real industrial process, but they can be used as case studies to synthesize HEN and to analyze the results.

3.2.1.1 Example 1

This example has 2 hot streams and 2 cold streams as shown in the Figure below. This process system displays the duty of hot utilities and cold utilities without HEN that total duty of Qc is equal to 1400 kW and total duty of Qh is equal to 2900 kW. The other data are illustrated in the Table 3.1 such as mass flow rates, the specific heat capacity, and EMAT.

Figure 3.1 The example 1 without HEN.

Table 3.1 The data of example 1

	Mass flow rate (kg/s)	Specific heat capacity (J/kg.K)	Duty of utility (kW)	EMAT (K)
H1	8.15	2454	400	3
H2	81.5	2454	1000	
C1	16.3	2454	2400	
C2	20.4	2454	500	

3.2.1.2 Example 2

This example comprises 3 hot streams and 3 cold streams as shown in the Figure below. This process system displays the duty of hot utilities and cold utilities without HEN that total duty of Qc is equal to 10080 kW and total duty of Qh is equal to 10847 kW, the total duty of the utilities is greater than that in example 1, so HEN can be saved TAC very much in this example. The other data are illustrated in the Table 3.2 such as mass flow rates, the specific heat capacity, and EMAT.

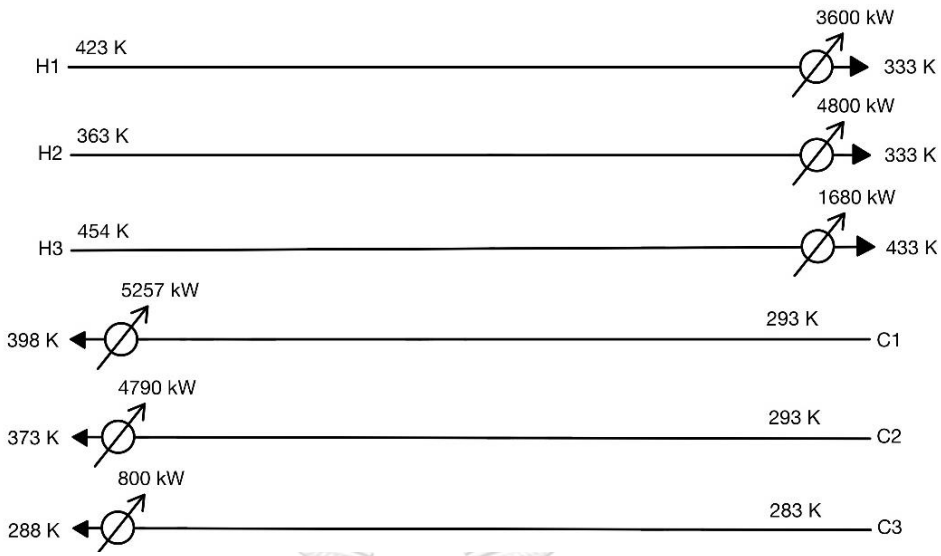

Figure 3.2 The example 2 without HEN.

Table 3.2 The data of example 2

	Mass flow rate (kg/s)	Specific heat capacity (J/kg.K)	Duty of utility (kW)	EMAT (K)
H1	16.3	2454	3600	3
H2	65.2	2454	4800	
H3	32.6	2454	1680	
C1	20.4	2454	5257	
C2	24.4	2454	4790	
C3	65.2	2454	800	

3.2.1.3 Example 3

This example comprises 7 hot streams and 3 cold streams as shown in the Figure below. This process system displays the duty of hot utilities and cold utilities without HEN that total duty of Qc is equal to 119632 kW and total duty of Qh is equal to 143521 kW, the total duty of the utilities is the greatest of all examples, so HEN can be reduced amount of utility load and TAC. The other data are illustrated in the Table 3.3 such as mass flow rates, the specific heat capacity, and EMAT.

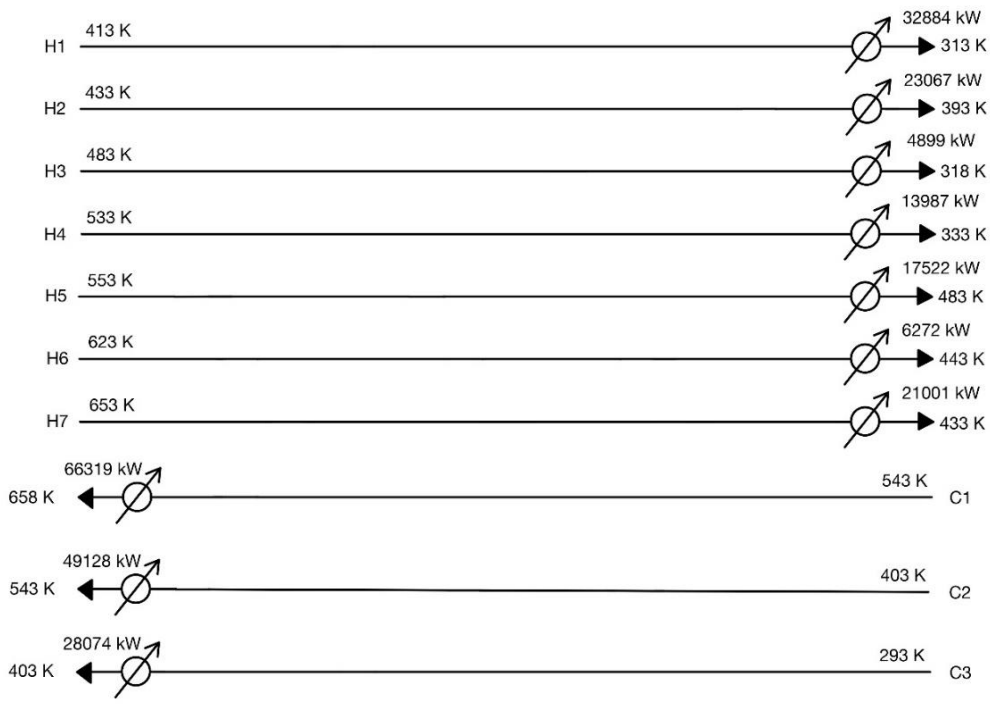

Figure 3.3 The example 3 without HEN.

Table 3.3 The data of example 3

	Mass flow rate (kg/s)	Specific heat capacity (J/kg.K)	Duty of utility (kW)	EMAT (K)
H1	134.0	2454	32884	3
H2	235.0	2454	23067	
H3	12.1	2454	4899	
H4	28.5	2454	13987	
H5	102.0	2454	17522	
H6	14.2	2454	6272	
H7	38.9	2454	21001	
C1	235.0	2454	66319	
C2	143.0	2454	49128	
C3	104.0	2454	28074	

จุฬาลงกรณ์มหาวิทยาลัย
CHULALONGKORN UNIVERSITY

3.2.1.4 Example 4

This example comprises 7 hot streams and 3 cold streams as the example 3. This process system displays the duty of hot utilities and cold utilities without HEN that total duty of Qc is equal to 119632 kW and total duty of Qh is equal to 143521 kW too, but the EMAT value is changed as displayed in Table 3.4 to see the effect of this factor to HENS in reducing of the duty of utilities.

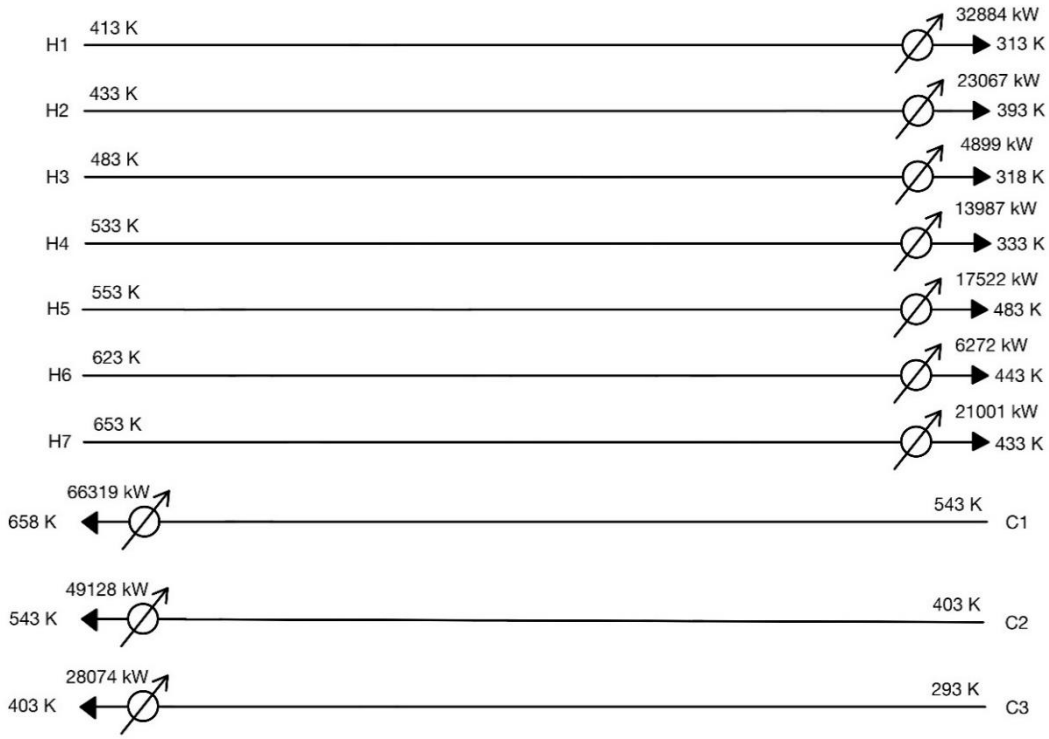

Chulalongkorn University

Figure 3.4 The example 4 without HEN.

Table 3.4 The data of example 4

	Mass flow rate (kg/s)	Specific heat capacity (J/kg.K)	Duty of utility (kW)	EMAT (K)
H1	134.0	2454	32884	5
H2	235.0	2454	23067	
H3	12.1	2454	4899	
H4	28.5	2454	13987	

	Mass flow rate (kg/s)	Specific heat capacity (J/kg.K)	Duty of utility (kW)	EMAT (K)
H5	102.0	2454	17522	5
H6	14.2	2454	6272	
H7	38.9	2454	21001	
C1	235.0	2454	66319	
C2	143.0	2454	49128	
C3	104.0	2454	28074	

This work intends to synthesize HENS and divides the procedures into 2 steps consisting of step-1 model; SWS model, and step-2 model; individual heat exchanger model. After that, step updating the variables from step-2 model is required to repeat the two step designs of HENS until the HEN result does not have major changes in the step-1 model, or the TAC of the latest HEN after updating step is worsen or increased. The flowchart diagram of the two-step designs is shown in Figure 3.5 and all equations used in this work are illustrated in appendix section.

All general case studies assumptions and constraints are as follows:

1. The operation of heat exchange is steady state
2. No heat loss through the process
3. The fluid properties are constant despite temperature gradient
4. The fluid is fully developed and turbulent flow (control with Reynold's number)
5. Surface areas per shell do not exceed 1000-meter square
6. Number of tubes per shell do not exceed 3000 tubes
7. Shell diameter must equal between 0.31 meter and 1.50 meter
8. Tube length must equal between 1 meter and 6 meters
9. Tube length is greater than shell diameter
10. Tube pitch is 1.25 times the outside diameter of tube size

3.2.2 <u>The SWS Model (Step-1 Model)</u>

Firstly, the indexes as I for hot streams, J for cold streams, and K for the stages are set. Next, parameters and variables from hot stream and cold stream data such as stream's properties, cost coefficients, and stream's temperatures are declared. Then, the equations with their names consisting of objective function, energy balance equations, constraint equations are declared. Finally, the initial value and boundary of some variables especially variables in the denominator are set to avoid divide by zero error. After preparing everything for running the model, we have to apply a new initialization and boundary to reduce the scale of calculation in case of infeasibility occurring. After the results is found, we must save and prepare them for next step.

Step-1 model: SWS model to design the conceptual HEN topology. The objective of this step is to minimize the TAC comprising of six terms excluding pumping cost as shown below.

$$Tcost = CUcost \cdot \sum_{I} qcu_I + HUcost \cdot \sum_{J} qhu_J + Fcost \cdot \left[\sum_{I}\sum_{J}\sum_{K} z_{I,J,K} \cdot NS + \sum_{I} zcu_I + \sum_{J} zhu_J\right] + \sum_{I}\sum_{J}\sum_{K} NS \cdot AC \cdot \left(\frac{A_{I,J,K}}{NS}\right)^{AE} + \sum_{I} AC \cdot Acu_I^{AE} + \sum_{J} AC \cdot Ahu_J^{AE} \quad (5.1)$$

Where first term is cold utility cost, second term is hot utility cost, third term is fixed cost for heat exchanger and the utilities, fourth term is area cost for heat exchangers, fifth term is area cost for cold utilities, and the last term is area cost for hot utilities.

3.2.3 <u>Individual Heat Exchanger Detailed Design Model (Step-2 Model)</u>

When SWS model is complete, its topology will be used to calculate the detailed design for individual heat exchanger such as inlet and outlet temperatures of heat exchangers, mass flow rate for two sides. Next, the design variables and sizing variables that include diameter, length, number of shells, number of tubes, fluid velocities, etc. are declared. Subsequently, heat exchanger equations and the objective

function of minimization the pumping cost and area cost are set. And the denominator variables are initialized to avoid divide by zero error. After running the step-2 model, the results for each design variable are checked not to have any violation, or impossible value from standard.

Step-2 model: Individual heat exchanger detailed design model of each heat exchanger from their topology of the first step. The objective of this step is to minimize area cost and pumping cost to correct the real area cost and add pumping cost for fulfilling the TAC.

$$cost = \left[PC \cdot \left(dPt\frac{mt}{\rho} + dPs\frac{ms}{\rho}\right)\right] + [AC \cdot Ns \cdot (Aso)^{AE}] \quad (5.2)$$

Where first term is pumping cost, and second term is corrected area cost.

3.2.4 Step Updating the Variables

After two-step designs, step updating the variables from the detailed design models are necessary to confirm the HENs are minimum TAC for those case studies. Then, the results from step-1 SWS model after step updating the variables are considered to check major changes (such as inlet or outlet temperature of shell or tube sides of heat exchangers, flow rate on any sides, sequences of heat exchanger for that stream matching, etc.) compared with the results from step-1 SWS model to simulate the detailed design model afterward. Hence, the recent TAC will be compared with previous TAC. If it is lower, updating step and two-step designs will continue until TAC getting worsen or increased.

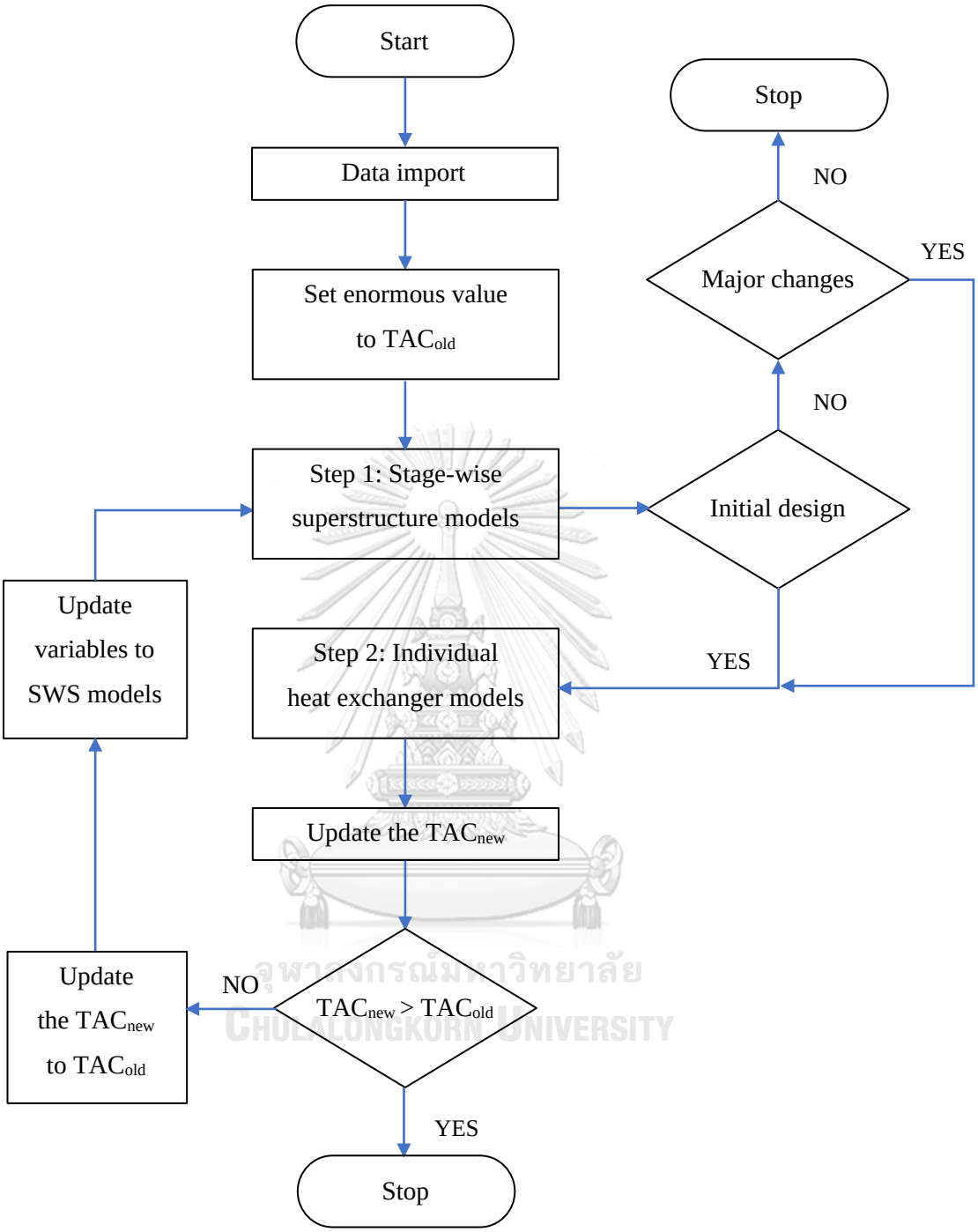

Figure 3.5 The flowchart of two-step model of HENS with detailed designs.

3.3 Optimization Procedures of HEN for the Challenging Case Study

This case study is from Wu (2022) et al. that the processes consist of liquid air energy storage (LAES) and standalone power generation (SAP) which shown in the Figure 3.6. The processes are about cold energy transfer of liquefied natural gas (LNG), so they contain many hot streams, cold streams, high-pressure streams, and low-pressure streams that need heat exchangers to transfer the heat, compressors to compress low-pressure streams, and turbine to expand high-pressure streams. The objective of this study is minimizing the total annual cost from the unit operations that are used in the processes. The stream data of the processes that are validated by Aspen Plus V12.1 program once more are shown in Table 3.5 and economic data are shown in Table 3.6 with a constant overall heat transfer coefficient equal to 850 W/m^2.K.

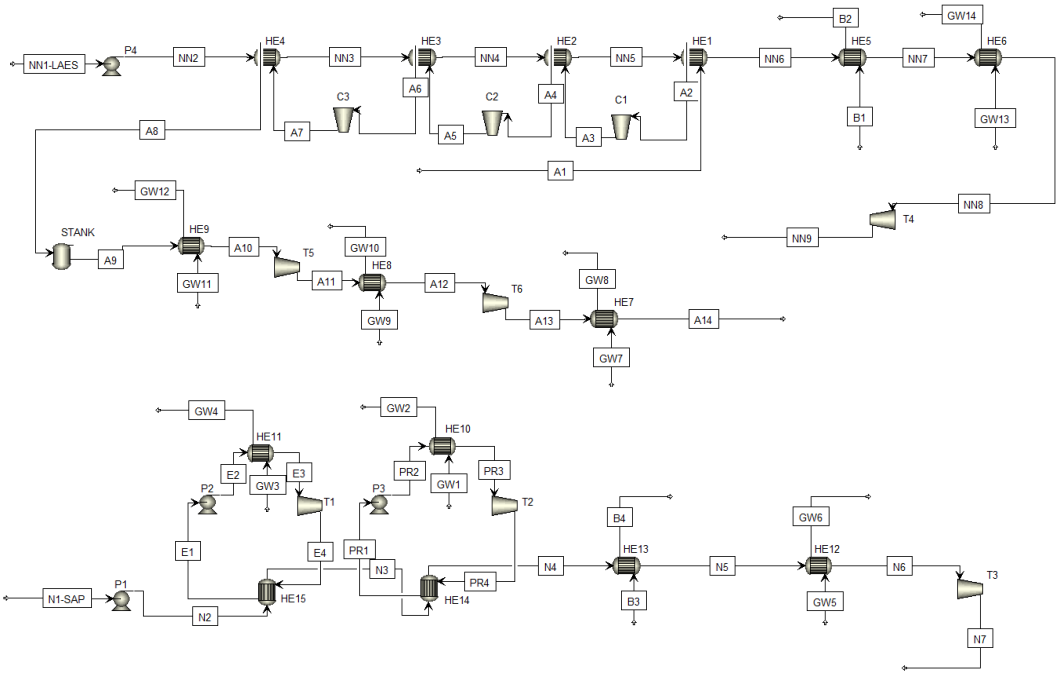

Figure 3.6 The Aspen Plus simulated process flow diagram of LAES-SAP processes (Wu, 2022).

Table 3.5 Stream data of the base case (Wu, 2022)

State point	Fluid	Phase	Pressure (MPa)	Temperature (K)	Mass flow rate (kg/s)
NN1	methane	liquid	0.10	111.000	1.00
NN2	methane	liquid	3.00	112.301	1.00
NN3	methane	liquid	3.00	135.467	1.00
NN4	methane	liquid	3.00	144.851	1.00
NN5	methane	liquid	3.00	153.517	1.00
NN6	methane	liquid	3.00	164.256	1.00
NN7	methane	vapor	3.00	290.000	1.00
NN8	methane	vapor	3.00	365.000	1.00
NN9	methane	vapor	1.00	290.127	1.00
A1	air	vapor	0.10	298.000	0.38
A2	air	vapor	0.10	170.000	0.38
A3	air	vapor	0.33	251.943	0.38
A4	air	vapor	0.33	160.000	0.38
A5	air	vapor	1.10	238.315	0.38
A6	air	vapor	1.10	149.000	0.38
A7	air	vapor	3.50	219.622	0.38
A8	air	liquid	3.50	125.000	0.38
A9	air	liquid	3.50	125.000	0.38
A10	air	vapor	3.50	293.000	0.38
A11	air	vapor	0.60	185.541	0.38
A12	air	vapor	0.60	293.000	0.38
A13	air	vapor	0.10	186.458	0.38
A14	air	vapor	0.10	293.000	0.38
B1	n-butane	liquid	0.40	295.000	5.00
B2	n-butane	liquid	0.40	237.337	5.00
B3	n-butane	liquid	0.40	295.000	5.00
B4	n-butane	liquid	0.40	254.339	5.00
GW1	water	liquid	0.10	370.000	1.72
GW2	water	liquid	0.10	342.463	1.72
GW3	water	liquid	0.10	370.000	0.88
GW4	water	liquid	0.10	298.290	0.88
GW5	water	liquid	0.10	370.000	1.00
GW6	water	liquid	0.10	328.199	1.00
GW7	water	liquid	0.10	370.000	1.00
GW8	water	liquid	0.10	361.135	1.00
GW9	water	liquid	0.10	370.000	1.00
GW10	water	liquid	0.10	360.916	1.00

จุฬาลงกรณ์มหาวิทยาลัย
CHULALONGKORN UNIVERSITY

State point	Fluid	Phase	Pressure (MPa)	Temperature (K)	Mass flow rate (kg/s)
GW11	water	liquid	0.10	370.000	1.00
GW12	water	liquid	0.10	345.261	1.00
GW13	water	liquid	0.10	370.000	1.00
GW14	water	liquid	0.10	329.460	1.00
E1	ethane	liquid	0.10	183.000	0.40
E2	ethane	liquid	4.80	185.264	0.40
E3	ethane	vapor	4.80	365.000	0.40
E4	ethane	vapor	0.10	192.099	0.40
PR1	propane	liquid	0.10	230.000	0.38
PR2	propane	liquid	3.10	231.552	0.38
PR3	propane	vapor	3.10	365.000	0.38
PR4	propane	vapor	0.10	236.099	0.38
N1	methane	liquid	0.10	111.000	1.00
N2	methane	liquid	4.30	112.883	1.00
N3	methane	liquid	4.30	165.234	1.00
N4	methane	liquid	4.30	188.010	1.00
N5	methane	vapor	4.30	290.000	1.00
N6	methane	vapor	4.30	365.000	1.00
N7	methane	vapor	1.00	267.383	1.00

Table 3.6 The economic data of base case that represent by Aspen Plus (Wu, 2022)

Unit Name	Type	Specification	Unit	Capital Cost ($)	Annual Cost ($/year)
HE1	Heat exchanger	1.026	m^2	1428.86	102.88
HE2	Heat exchanger	0.937	m^2	1318.81	94.95
HE3	Heat exchanger	1.024	m^2	1426.20	102.69
HE4	Heat exchanger	2.568	m^2	3234.06	232.85
HE5	Heat exchanger	29.971	m^2	28804.56	2073.93
HE6	Heat exchanger	13.030	m^2	13724.53	988.17
HE7	Heat exchanger	0.401	m^2	619.28	44.59
HE8	Heat exchanger	0.410	m^2	631.54	45.47
HE9	Heat exchanger	0.976	m^2	1366.53	98.39
HE10	Heat exchanger	7.449	m^2	8343.65	600.74
HE11	Heat exchanger	9.696	m^2	10550.31	759.62
HE12	Heat exchanger	13.724	m^2	14372.87	1034.85
HE13	Heat exchanger	23.018	m^2	22773.81	1639.71

จุฬาลงกรณ์มหาวิทยาลัย
CHULALONGKORN UNIVERSITY

Unit Name	Type	Specification	Unit	Capital Cost ($)	Annual Cost ($/year)
HE14	Heat exchanger	3.461	m^2	4218.04	303.70
HE15	Heat exchanger	5.250	m^2	6111.63	440.04
			Total	118924.67	**8562.58**

3.3.1 Process Description

This process from Wu (2022) aims to evaporate the liquefied natural gas (LNG) to the vapor phase that must do this operation before using at the working area and the streams in the process consist of LNG, air, ethane, propane, n-butane, and geothermal water that have operating conditions as seen in Table 3.5 above. This process can be divided into 2 sub-processes that are the standalone power (SAP) system and the liquid air energy storage (LAES) system. Besides, the electricity can generate from SAP system and LAES system via the four turbines (T1, T2, T3, and T4) in the normal situation. However, when the demand of electric power is increasing, the liquid air that storage in the tank will bring out to the two turbines (T5 and T6) for additional electricity to satisfy the demand. Furthermore, the n-butane from this process can spend into the hydrate based desalination subsystem (HBD) for desalination the seawater to freshwater and the geothermal water is renewable from underground geothermal energies.

In SAP system, it has two organic Rankine cycles (ORC) that are parallel each other and the original ORC comprises of a condenser, a pump, an evaporator, and a turbine. Therefore, the LNG can be heated via two condensers by exchanging the heat duties from ethane and propane respectively, but the heat duties are not enough to change the phase of LNG, then it need another two heat exchangers with the n-butane, and geothermal water as hot streams for heating sources respectively to obtain the re-gasified natural gas, then the turbine will reduce temperature and pressure of the re-gasified natural gas at desired temperature and pressure. Moreover, the geothermal water is used as the hot stream in the evaporators of ORCs to evaporate ethane and propane completely.

In LAES system, the first four heat exchangers apply air at atmospheric pressure and room temperature as hot stream to heat the LNG, for a constant driving force purpose (temperature difference), the LNG and air must have countercurrent

flow directions each other. Next, the LNG needs another two heat exchangers which n-butane and geothermal water are hot streams to vaporize the LNG to the vapor phase and implement a turbine as a final unit operation to earn the re-gasified natural gas at desired temperature and pressure. The air that acts as a hot stream must flow to the compressor to compress and become the liquid air after transfer the heat with the LNG for each heat exchanger, so the liquid air will store in the storage tank. At on peak time, the liquid air will flow to a heat exchanger and a turbine for changing the phase to vapor and generating more electricity respectively. The geothermal water is also hot streams that is consumed to boil the liquid air in the heat exchangers, after passing three heat exchangers and two turbines, the liquid air becomes normal air at atmospheric pressure that can release into the environment safely.

3.3.2 Tuning the GAMS Model

From the data of the base case above, we firstly establish the GAMS model by using the data from the base case such as structure of unit operations, stream conditions, and to validate GAMS model before doing the two step calculations. The GAMS grid diagram of heat exchanger network that comes from the base case is shown in Figure 3.7. After that, examination the results, if the deviation of results is very small or almost no deviation, the model of this study is reliably accurate. This is also called tuning the model that is prepared for the two step calculations further. The comparison of the net duty, area, LMTD (log-mean temperature difference), and Cp (specific heat capacity), between base case and this model is displayed in Table 3.7, 3.8, 3.9, and 3.10 respectively.

จุฬาลงกรณ์มหาวิทยาลัย
CHULALONGKORN UNIVERSITY

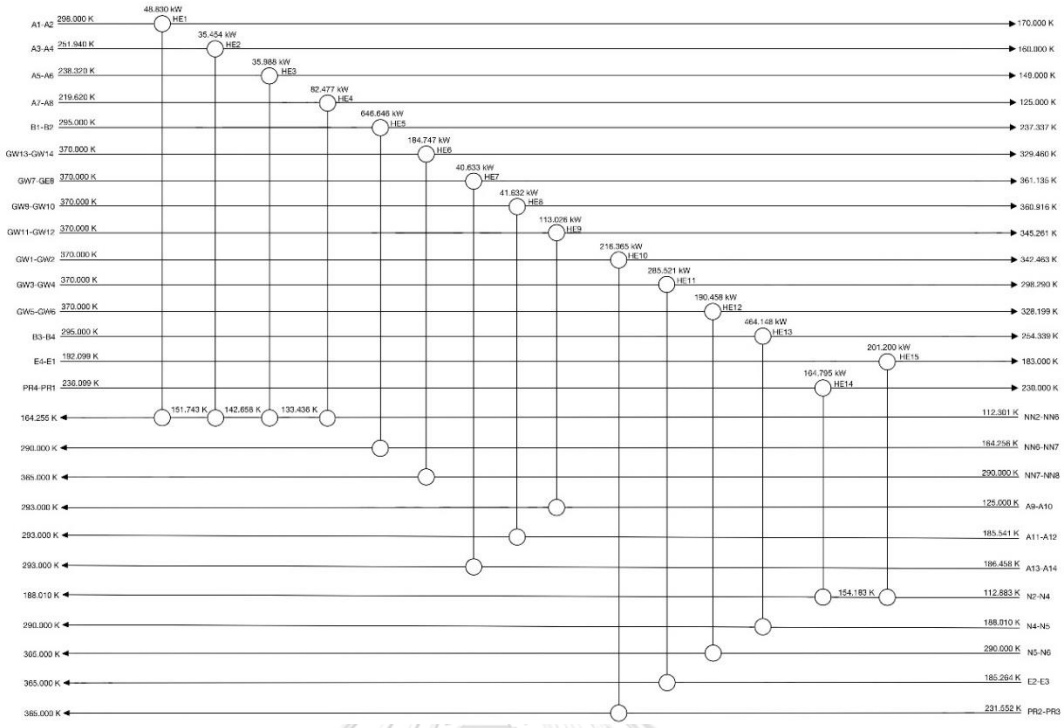

Figure 3.7 The tuning GAMS model for HENS.

Table 3.7 Tuning of the duty from heat exchanger between the base case and model

Unit Name	Type	Base case Net Duty (kW)	The GAMS model Net Duty (kW)	% Deviation
HE1	Heat exchanger	48.830	48.830	0.00
HE2	Heat exchanger	35.455	35.454	0.00
HE3	Heat exchanger	35.986	35.988	0.01
HE4	Heat exchanger	82.478	82.477	0.00
HE5	Heat exchanger	646.647	646.646	0.00
HE6	Heat exchanger	184.747	184.747	0.00
HE7	Heat exchanger	40.633	40.633	0.00
HE8	Heat exchanger	41.632	41.632	0.00
HE9	Heat exchanger	113.026	113.026	0.00
HE10	Heat exchanger	216.365	216.365	0.00
HE11	Heat exchanger	285.521	285.521	0.00
HE12	Heat exchanger	190.458	190.458	0.00
HE13	Heat exchanger	464.148	464.148	0.00
HE14	Heat exchanger	164.795	164.795	0.00
HE15	Heat exchanger	201.200	201.200	0.00

จุฬาลงกรณ์มหาวิทยาลัย
Chulalongkorn University

Table 3.8 Tuning of the area from heat exchanger between the base case and model

Unit Name	Type	Base case Area (m^2)	The GAMS model Area (m^2)	% Deviation
HE1	Heat exchanger	1.026	0.986	3.87
HE2	Heat exchanger	0.937	0.880	6.12
HE3	Heat exchanger	1.024	0.957	6.50
HE4	Heat exchanger	2.568	2.518	1.95
HE5	Heat exchanger	29.971	29.536	1.45
HE6	Heat exchanger	13.030	12.957	0.56
HE7	Heat exchanger	0.401	0.401	0.03
HE8	Heat exchanger	0.410	0.410	0.04
HE9	Heat exchanger	0.976	0.975	0.05
HE10	Heat exchanger	7.449	7.269	2.41
HE11	Heat exchanger	9.696	9.457	2.47
HE12	Heat exchanger	13.724	13.652	0.52
HE13	Heat exchanger	23.018	22.725	1.27
HE14	Heat exchanger	3.461	3.183	8.04
HE15	Heat exchanger	5.250	4.519	13.93

Table 3.9 Tuning of the LMTD from heat exchanger between the base case and model

Unit Name	Type	Base case LMTD (K)	The GAMS model LMTD (K)	% Deviation
HE1	Heat exchanger	56.010	58.277	4.05
HE2	Heat exchanger	44.501	47.380	6.47
HE3	Heat exchanger	41.363	44.262	7.01
HE4	Heat exchanger	37.784	38.535	1.99
HE5	Heat exchanger	25.383	25.757	1.47
HE6	Heat exchanger	16.681	16.774	0.56
HE7	Heat exchanger	119.244	119.263	0.02
HE8	Heat exchanger	119.515	119.533	0.02
HE9	Heat exchanger	136.308	136.364	0.04
HE10	Heat exchanger	34.173	35.018	2.47
HE11	Heat exchanger	34.644	35.519	2.53
HE12	Heat exchanger	16.327	16.413	0.53
HE13	Heat exchanger	23.723	24.029	1.29
HE14	Heat exchanger	56.014	60.905	8.73

Unit Name	Type	Base case LMTD (K)	The GAMS model LMTD (K)	% Deviation
HE15	Heat exchanger	45.085	52.379	16.18

Table 3.10 Tuning of the Cp from heat exchanger between the base case and model

Unit Name	Base case		The GAMS model		% Deviation hot side	% Deviation cold side
	Cp hot (kJ/kg.K)	Cp cold (kJ/kg.K)	Cp hot (kJ/kg.K)	Cp cold (kJ/kg.K)		
HE1	1.0039	4.5470	1.0039	3.9024	0.00	14.18
HE2	1.0148	4.0912	1.0148	3.9024	0.00	4.61
HE3	1.0603	3.8348	1.0603	3.9024	0.00	1.76
HE4	2.2938	3.5604	2.2938	3.9024	0.00	9.61
HE5	2.2428	5.1426	2.2428	5.1426	0.00	0.00
HE6	4.5571	2.4633	4.5571	2.4633	0.00	0.00
HE7	4.5834	1.0036	4.5834	1.0036	0.00	0.00
HE8	4.5832	1.0195	4.5832	1.0195	0.00	0.00
HE9	4.5687	1.7705	4.5687	1.7705	0.00	0.00
HE10	4.5664	4.2667	4.5664	4.2667	0.00	0.00
HE11	4.5431	3.9714	4.5431	3.9714	0.00	0.00
HE12	4.5563	2.5394	4.5563	2.5394	0.00	0.00
HE13	2.2830	4.5509	2.2830	4.5509	0.00	0.00
HE14	71.1096	7.2354	71.1096	4.8717	0.00	32.67
HE15	55.2827	3.8433	55.2827	4.8717	0.00	26.76

จุฬาลงกรณ์มหาวิทยาลัย
Chulalongkorn University

3.3.3 <u>The Improved Design HENS</u>

This part intends to synthesize the improved network of heat exchanger that is better than the base case network and also divides the procedures into 2 steps that consist of stage-wise superstructure model and individual heat exchanger model. After that, updating the variables from second step is requirement to repeat the two step designs of the networks again until the networks don’t have major changes in the first step design, or the total annual costs of the latest networks after updating is increased. The flowchart diagram of the 2 step designs is shown in Figure 3.8 and all equations that are used in this work are illustrated in appendix section.

All the challenging case study applies the assumptions and constraints as following:

1. The operation of heat exchange is steady state
2. No heat loss through the process
3. The fluid properties are average between inlet temperature and outlet temperature for each heat exchanger
4. The fluid is fully developed and turbulent flow (control with Reynold's number)
5. Surface areas per shell do not exceed 100-meter square
6. Number of tubes per shell do not exceed 1000 tubes
7. Shell diameter must equal between 0.10 meter and 1.00 meter
8. Tube length is not greater than 3 meters
9. Tube length is greater than shell diameter
10. Tube pitch is 1.25 times the outside diameter of tube size

3.3.4 <u>The SWS Model (Step-1 Model)</u>

Firstly, the indexes as I for hot streams, J for cold streams, and K for the stages are set. Next, parameters and variables from hot stream and cold stream data such as stream's properties, cost coefficients, and stream's temperatures are declared. Then, the equations with their names consisting of objective function, energy balance equations, constraint equations are declared. Finally, the initial value and boundary of some variables especially variables in the denominator are set to avoid divide by zero error. After preparing everything for running the model, we have to apply a new initialization and boundary to reduce the scale of calculation in case of infeasibility occurring. After the results is found, we must save and prepare them for next step. As seen in the process flow diagram, this challenging case does not have hot or cold utilities and there is less room for optimization, so the results in this case study are hard to obtain even the term in the objective function is reduce from six terms to one term.

Step-1 model: SWS model to design the conceptual HEN topology. The objective of this step is to minimize the TAC excluding pumping cost and the objective function is shown below.

$$TCost = Faccost \cdot \left[\sum_{I}\sum_{J}\sum_{K} NS \cdot AC \cdot \left(\frac{A_{I,J,K}}{NS}\right)^{AE}\right] \tag{5.3}$$

Where this term area cost for heat exchangers.

3.3.5 Individual Heat Exchanger Detailed Design Model (Step-2 Model)

When SWS model is complete, its topology will be used to calculate the detailed design for individual heat exchanger such as inlet and outlet temperatures of heat exchangers, mass flow rate for two sides. Next, the design variables and sizing variables that include diameter, length, number of shells, number of tubes, fluid velocities, etc. are declared. Subsequently, heat exchanger equations and the objective function of minimization the pumping cost and area cost are set. And the denominator variables are initialized to avoid divide by zero error. After running the step-2 model, the results for each design variable are checked not to have any violation, or impossible value from standard. In addition, the detailed design of the challenging case is realistic because the properties of fluids are not constant for each heat exchanger unlike the properties of fluids of general case studies that are the same for hot streams and cold streams with constant value. For pumping costs, there are two periods that have different prices and number of hours per day, so they are called on peak time and off peak time which have high price and low price of electricity respectively.

จุฬาลงกรณ์มหาวิทยาลัย
CHULALONGKORN UNIVERSITY

Step-2 model: Individual heat exchanger detailed design model of each heat exchanger from their topology of the first step. The objective of this step is to minimize area cost and pumping cost to correct the real area cost and add pumping cost for fulfilling the TAC.

$$cost = \left[\left(\frac{Eon \cdot hon \cdot Nday}{1000} + \frac{Eoff \cdot hoff \cdot Nday}{1000}\right) \cdot \left(dPt\frac{mt}{\rho t} + dPs\frac{ms}{\rho s}\right)\right]$$
$$+ [Faccost \cdot AC \cdot Ns \cdot (Aso)^{AE}] \tag{5.4}$$

Where first term is pumping cost, and second term is corrected area cost.

3.3.6 Step Updating the Variables

After two-step designs, step updating the variables from the detailed design models are necessary to confirm the HENs are minimum TAC for those case studies. Then, the results from step-1 SWS model after step updating the variables are considered to check major changes (such as inlet or outlet temperature of shell or tube sides of heat exchangers, flow rate on any sides, sequences of heat exchanger for that stream matching, etc.) compared with the results from step-1 SWS model to simulate the detailed design model afterward. Hence, the recent TAC will be compared with previous TAC. If it is lower, updating step and two-step designs will continue until TAC getting worsen or increased

จุฬาลงกรณ์มหาวิทยาลัย
CHULALONGKORN UNIVERSITY

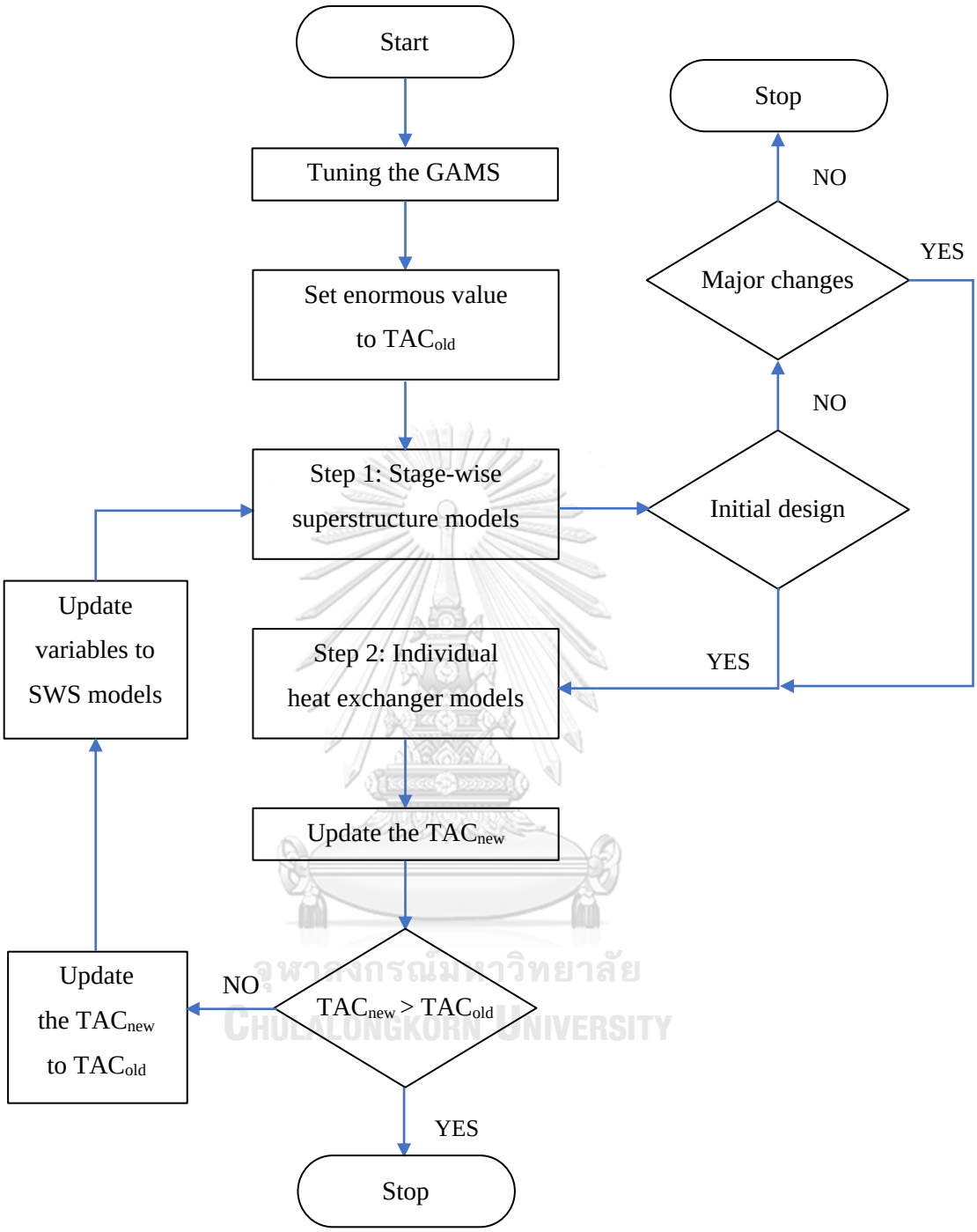

Figure 3.8 The flowchart of two step designs for the challenging case study.

3.3.7 The Detailed Design HEN of the Base-Case for Challenging Case Study

The area costs of the improved design will be corrected and the two step calculations will add the pumping costs to make the design network more practical, so the second step must apply to the base case to correct the area costs and supplement the pumping costs. This procedure can compare with further improved design of the HEN of the base case genuinely and more easily. Thus, the detail of variables for fifteen heat exchangers in the base case are shown in Table 3.11, 3.12, and 3.13 respectively.

Table 3.11 Design variables for each heat exchanger of the base case (Exchanger 1 to 5)

	Exchanger 1	Exchanger 2	Exchanger 3	Exchanger 4	Exchanger 5
Area (m^2)	16.647	8.171	5.479	8.831	45.656
Duty (kW)	48.830	35.454	35.988	82.477	646.646
Mt (kg/s)	1.00	1.00	1.00	1.00	1.00
Ms (kg/s)	0.38	0.38	0.38	0.38	5.00
NS	1	1	1	1	1
Ntp	2	3	3	10	10
Ds (m)	0.31	0.34	0.31	0.31	0.39
Nt	120	316	270	270	431
Nb	3	2	6	48	17
do (m)	0.01905	0.01270	0.01270	0.01270	0.01270
di (m)	0.01656	0.01021	0.01021	0.01021	0.01021
Lt (m)	2.32	0.65	0.51	0.82	2.66
vt (m/s)	0.23	0.32	0.36	1.12	1.63
vs (m/s)	6.55	4.40	3.80	1.15	0.71
Pt (m)	0.02381	0.01588	0.01588	0.01588	0.01588
ht ($W/m^2.K$)	664.0	1002.6	1121.1	2797.5	2121.8
hs ($W/m^2.K$)	65.7	123.4	232.3	900.7	1401.4
U ($W/m^2.K$)	58.7	106.0	181.6	607.1	718.3
Ud ($W/m^2.K$)	56.7	99.7	163.7	445.0	558.0
ΔPt (Pa)	131	318	390	14522	20373
ΔPs (Pa)	669	1208	5734	46900	22705
Pitch layout	Square	Square	Square	Square	Square
Pumping cost ($/year)	208.58	106.85	120.72	109.88	329.20

จุฬาลงกรณ์มหาวิทยาลัย
CHULALONGKORN UNIVERSITY

	Exchanger 1	Exchanger 2	Exchanger 3	Exchanger 4	Exchanger 5
Area cost ($/year)	1228.90	652.28	457.08	698.97	3016.35

Table 3.12 Design variables for each heat exchanger of the base case (Exchanger 6 to 10)

	Exchanger 6	Exchanger 7	Exchanger 8	Exchanger 9	Exchanger 10
Area (m^2)	23.023	8.750	2.486	1.474	9.438
Duty (kW)	184.747	40.633	41.632	113.026	216.365
Mt (kg/s)	1.00	0.38	0.38	0.38	0.38
Ms (kg/s)	1.00	1.00	1.00	1.00	1.72
NS	1	1	1	1	1
Ntp	3	1	2	6	10
Ds (m)	0.31	0.34	0.20	0.10	0.20
Nt	270	82	29	5	113
Nb	62	23	13	28	20
do (m)	0.01270	0.02540	0.02540	0.03175	0.01270
di (m)	0.01021	0.02291	0.02291	0.02921	0.01021
Lt (m)	2.14	1.34	1.07	2.96	2.09
vt (m/s)	7.18	7.34	6.80	2.19	1.26
vs (m/s)	0.50	0.28	0.35	0.50	0.46
Pt (m)	0.01588	0.03175	0.03175	0.03969	0.01588
ht ($W/m^2.K$)	891.1	45.5	182.9	1473.5	1547.1
hs ($W/m^2.K$)	5250.4	2978.1	3323.0	3580.7	5150.5
U ($W/m^2.K$)	595.7	40.4	155.0	904.8	917.0
Ud ($W/m^2.K$)	481.1	39.4	141.8	586.4	670.9
ΔPt (Pa)	11443	230	2103	23982	22191
ΔPs (Pa)	53274	3244	1616	2642	9428
Pitch layout	Square	Square	Square	Square	Square
Pumping cost ($/year)	592.85	53.45	76.20	31.55	45.29
Area cost ($/year)	1640.05	693.30	226.18	142.07	741.57

จุฬาลงกรณ์มหาวิทยาลัย
CHULALONGKORN UNIVERSITY

Table 3.13 Design variables for each heat exchanger of the base case (Exchanger 11 to 15)

	Exchanger 11	Exchanger 12	Exchanger 13	Exchanger 14	Exchanger 15
Area (m^2)	37.289	25.495	45.783	3.789	4.777
Duty (kW)	285.521	190.458	464.148	164.795	201.200
Mt (kg/s)	0.40	1.00	1.00	1.00	1.00
Ms (kg/s)	0.88	1.00	5.00	0.38	0.40
NS	1	1	1	1	1
Ntp	10	7	10	3	7
Ds (m)	0.49	0.44	0.49	0.20	0.25
Nt	300	242	300	114	177
Nb	71	51	21	19	20
do (m)	0.01905	0.01905	0.01905	0.01270	0.01270
di (m)	0.01656	0.01656	0.01656	0.01021	0.01021
Lt (m)	2.08	1.76	2.55	0.83	0.68
vt (m/s)	0.21	4.85	1.18	1.15	1.30
vs (m/s)	0.32	0.36	0.73	0.77	0.90
Pt (m)	0.02381	0.02381	0.02381	0.01588	0.01588
ht ($W/m^2.K$)	309.8	810.3	1138.2	2439.2	3172.7
hs ($W/m^2.K$)	3100.0	3611.2	1189.9	2600.0	3035.3
U ($W/m^2.K$)	242.5	560.0	515.5	1013.2	1228.7
Ud ($W/m^2.K$)	221.0	457.5	427.3	721.0	823.8
ΔPt (Pa)	519	13129	6093	3102	11761
ΔPs (Pa)	29045	20493	21982	7154	11388
Pitch layout	Square	Square	Square	Square	Square
Pumping cost ($/year)	31.66	439.30	256.89	23.66	59.68
Area cost ($/year)	2519.03	1795.89	3023.82	329.15	404.52

Therefore, Table 3.14 is the comparison between the original challenging case study and after applying second step calculation which show the conceptual area and corrected area, overall heat transfer coefficient, and design overall heat transfer coefficient. In summary, the costs after correction are illustrated in Table 3.15 that classify into area costs and pumping costs.

จุฬาลงกรณ์มหาวิทยาลัย
CHULALONGKORN UNIVERSITY

Table 3.14 Comparison of the original base case and applying the 2nd step

Unit Name	Conceptual Area (m^2)	2nd Corrected Area (m^2)	U ($W/m^2.K$)	2nd Ud ($W/m^2.K$)
HE1	1.026	16.647	850.0	56.7
HE2	0.937	8.171	850.0	99.7
HE3	1.024	5.479	850.0	163.7
HE4	2.568	8.831	850.0	445.0
HE5	29.971	45.656	850.0	558.0
HE6	13.030	23.023	850.0	481.1
HE7	0.401	8.750	850.0	39.4
HE8	0.410	2.486	850.0	141.8
HE9	0.976	1.474	850.0	586.4
HE10	7.449	9.438	850.0	670.9
HE11	9.696	37.289	850.0	221.0
HE12	13.724	25.495	850.0	457.5
HE13	23.018	45.783	850.0	427.3
HE14	3.461	3.789	850.0	721.0
HE15	5.250	4.777	850.0	823.8

Table 3.15 The comparison of TAC between the original base case and applying 2nd design of this study

	The Original of Base Case Design	Applying 2nd step Design
Total Annual Cost ($/year)	8,562.58	20,054.92
Area Cost ($/year)	8,562.58	17,569.17
Pumping Cost ($/year)	0.00	2,485.75
Number of Exchangers	15	15

CHULALONGKORN UNIVERSITY

CHAPTER 4
RESULTS AND DISCUSSION

4.1 General Case Studies

This section illustrates the case studies (Kazi, 2021a) of HENS and detailed design by using mixed-integer non-linear programming (MINLP) and dividing into 2 steps to completely makes the practical heat exchanger network synthesis that are the SWS model and individual heat exchanger model.

There are 4 examples from the case studies (Kazi, 2021a) where

1. the first example having only two hot streams and two cold streams
2. the second example having three hot streams and three cold streams
3. the third example, which is the most complex case, having seven hot streams and three cold streams.
4. and the fourth example, that is the same data as example 3, but having a difference in a design parameter.

These four examples apply the same stream properties as shown in the Table 4.1. Synthesis the heat exchanger network for each example requires 2 steps as mentioned above and needs to update some parameters from the result of second step such as design overall heat transfer coefficients, and number of shells for correction the area cost. After updating, the topology results may be changed from the initial, so the second step of detailed design must be done again until the topology of the first step does not change after updating. The nomenclature and list of equations that are used in two step designs are illustrated in the end part of this report.

จุฬาลงกรณ์มหาวิทยาลัย
Chulalongkorn University

Table 4.1 Stream properties in the case studies (Kazi, 2021a)

Stream properties	Value (unit)
Density	634 (kg/m^3)
Viscosity	0.00024 (kg/m.s)
Specific heat capacity	2454 (J/kg.K)
Thermal conductivity	0.114 (W/m.K)
Dirt resistance	0.00017 (m^2.K/W)

4.1.1 Example 1

The stream data, including mass flow rate, supply temperature, and target temperature, are shown in Table 4.2. The parameter of this example also shows in Table 4.3 and assume the overall heat transfer coefficient as the same value as the utilities to be constant for every heat exchanger.

Table 4.2 Stream data for example 1 (Mizutani, 2003)

	m (kg/s)	T^S (K)	T^T (K)
H1	8.15	368	348
H2	81.5	353	348
C1	16.3	303	363
C2	20.4	333	343

Table 4.3 Parameter data for example 1 (Mizutani, 2003)

Parameter	Value (unit)
CUcost	6 ($/kW.year)
HUcost	60 ($/kW.year)
Fcost	1000 ($/year)
AC	60 ($/m^2.year)
AE	0.6 (-)

จุฬาลงกรณ์มหาวิทยาลัย
CHULALONGKORN UNIVERSITY

Parameter	Value (unit)
NS	1 (-)
U	0.444 (kW/m^2.K)
EMAT	3 (K)
Thuin	500 (K)
Thuout	500 (K)
Tcuin	300 (K)
Tcuout	320 (K)

For step 1 calculation, using 3 number of stages (NOK) obtain the result of total annual costs that consist of utility costs, area costs, and fixed costs in annualize forms. The minimum-cost network result with topology is shown in Figure 4.1 including two heat exchangers and two hot utilities. Table 4.4 also display the general design for heat exchanger where the number of exchangers is the number of shells for heat exchangers and they are always equal to one for hot utilities and cold utilities, additionally, number of exchangers related to annual fixed cost.

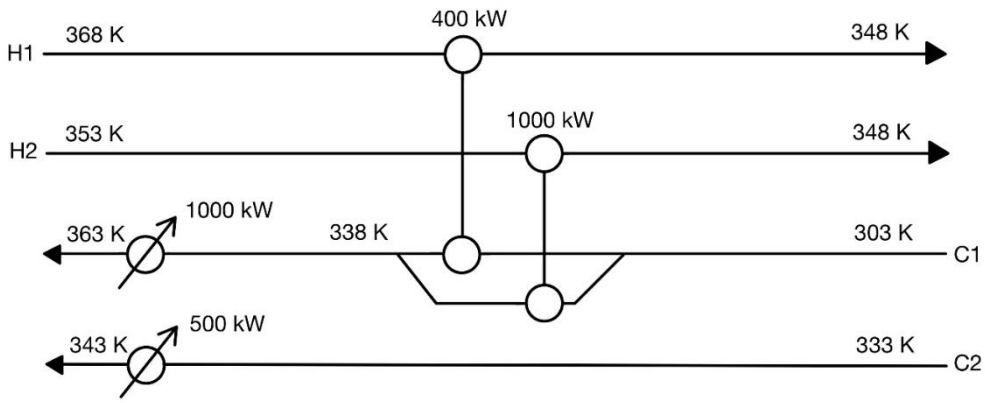

Figure 4.1 Minimum-cost heat exchanger network synthesis from step 1 calculation for example 1.

Table 4.4 General design of heat exchangers and utilities from step 1 calculation for example 1

	Stream link	Duty (kW)	Area (m^2)	Number of exchangers
Heat exchanger 1	H1 and C1	400	24.35	1
Heat exchanger 2	H2 and C1	1000	82.44	1
Hot utility 1	C1	1000	15.10	1
Hot utility 2	C2	500	6.96	1

For step 2 calculation, applying the topology data of step 1 designs the next model to obtain the detailed design for heat exchangers individually, the example of design variables is the design overall heat transfer coefficient (Ud), pressure drop for shell side and tube side, shell diameter, tube diameter, and tube length. Additional parameters display with their value in Table 4.5 and the detailed designs for two process heat exchangers in Figure 1 with their pumping costs and corrected area costs are shown in Table 4.6.

Table 4.5 Additional parameters for step 2 calculation of example 1

Parameter	Value (unit)
PC	0.7 ($/W.year)
km	15 (W/m.K)
e	0.000002 (m)
CTP	0.9 (-)

จุฬาลงกรณ์มหาวิทยาลัย
Chulalongkorn University

Table 4.6 Design variables for each heat exchanger in example 1

	Exchanger 1	Exchanger 2
Area (m^2)	26.19	90.41
Duty (kW)	400	1000
Mt (kg/s)	4.66	11.64
Ms (kg/s)	8.15	81.50
NS	1	1
Ntp	3	1
Ds (m)	0.31	0.39
Nt	120	427
Nb	8	1
do (m)	0.01905	0.01270
di (m)	0.01656	0.01021
Lt (m)	3.65	5.31
vt (m/s)	0.85	0.53
vs (m/s)	0.51	0.62
Pt (m)	0.02381	0.01588
ht ($W/m^2.K$)	1236.7	924.7
hs ($W/m^2.K$)	991.9	1324.6
U ($W/m^2.K$)	493.3	456.1
Ud ($W/m^2.K$)	455.1	423.3
ΔPt (Pa)	6181	1641
ΔPs (Pa)	3177	2044
Pitch layout	Square	Square
Pumping cost ($/year)	60.37	205.06
Area cost ($/year)	425.64	895.14

จุฬาลงกรณ์มหาวิทยาลัย
Chulalongkorn University

Table 4.7 is the comparison between step 1 calculation and step 2 calculation which illustrate the conceptual area from step 1 and corrected area from step 2, overall heat transfer coefficient from step 1 and design overall heat transfer coefficient from step 2. However, the topology does not change after updating the design overall heat transfer coefficient and area costs for this example, topology remains as Figure 4.1, so no need to repeat the step 2 again and Figure 4.1 is the final design HEN with detailed designs in Table 4.6.

Table 4.7 Comparison of step 1 calculation and step 2 calculation of example 1

	Step 1		Step 2	
	Conceptual Area (m^2)	U ($W/m^2.K$)	Corrected Area (m^2)	Ud ($W/m^2.K$)
Heat exchanger 1	24.35	444	26.19	455.1
Heat exchanger 2	82.44	444	90.41	423.3

After 2 step designs and updating of this example, we can ensure that topology with detailed design is practical and can apply in the real industry by minimum the TAC of the design network. Moreover, the comparison of total annual cost divided into utility costs, corrected area costs, pumping costs, and fixed costs is shown in Table 4.8.

Table 4.8 Summary of TAC compared with other studies for example 1

	This study	Kazi (2021a)	Kazi (2021b)	Mizutani (2003)	Ravagnani and Caballero (2007)
Total annual Cost ($/year)	96,121.57	96,714.74	97,360.94	95,852.00	96,137.71

	This study	Kazi (2021a)	Kazi (2021b)	Mizutani (2003)	Ravagnani and Caballero (2007)
Utility Cost ($/year)	90,037.26	90,000.00	90,000.00	90,000.00	90,000.00
Area Cost ($/year)	1,818.88	1,821.05	1,604.67	1,608.00	1,675.52
Pumping Cost ($/year)	265.43	893.68	1,756.26	244.00	462.19
Fixed Cost ($/year)	4,000.00	4,000.00	4,000.00	4,000.00	4,000.00
Number of exchangers	4	4	4	4	4

4.1.2 Example 2

This example will increase the complexity and some parameters are not equal to be used in example 1 such as the temperature of utilities. The data of 3 hot streams and 3 cold streams, including mass flow rate, supply temperature, and target temperature, are shown in Table 4.9. The parameter of this example also shows in Table 4.10 and also assume the overall heat transfer coefficient as the same value as the utilities to be constant for every heat exchanger.

CHULALONGKORN UNIVERSITY

Table 4.9 Stream data for example 2 (Mizutani, 2003)

	m (kg/s)	T^S (K)	T^T (K)
H1	16.3	423	333
H2	65.2	363	333
H3	32.6	454	433
C1	20.4	293	398
C2	24.4	293	373
C3	65.2	283	288

Table 4.10 Parameter data for example 2 (Mizutani, 2003)

Parameter	Value (unit)
CUcost	6 ($/kW.year)
HUcost	60 ($/kW.year)
Fcost	1000 ($/year)
AC	60 ($/m^2.year)
AE	0.6 (-)
NS	1 (-)
U	0.444 (kW/m^2.K)
EMAT	3 (K)
Thuin	700 (K)
Thuout	700 (K)
Tcuin	300 (K)
Tcuout	320 (K)

For step 1 calculation, we assume number of shells to be equal to one for heat exchangers and use 4 number of stages (NOK) to obtain the result of TAC that consists of utility costs, area costs, and fixed costs in annualize forms. The minimum-cost HEN result with topology is shown in Figure 4.2 including five heat exchangers and a hot utility. Table 4.11 display the general design for heat exchanger where the number of exchangers is the number of shells for heat exchangers and they are always equal to one for hot utilities and cold utilities, additionally, number of exchangers related to annual fixed cost.

จุฬาลงกรณ์มหาวิทยาลัย
Chulalongkorn University

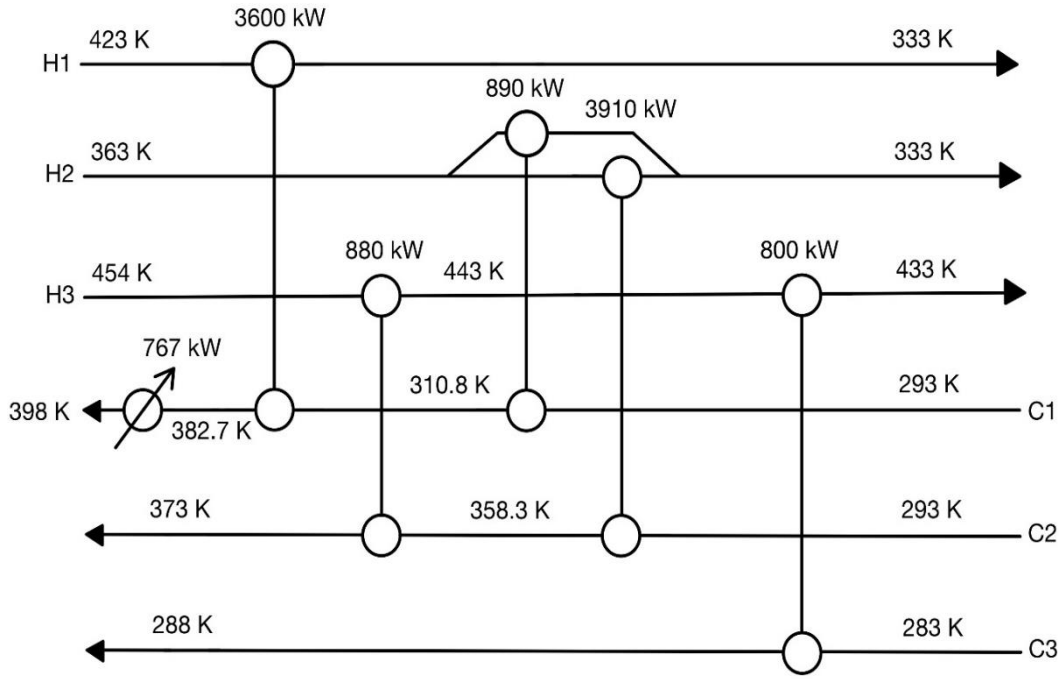

Figure 4.2 Minimum-cost heat exchanger network synthesis from step 1 calculation for example 2.

Table 4.11 General design of heat exchangers and utilities from step 1 calculation for example 2

	Stream link	Duty (kW)	Area (m^2)	Number of exchangers
Heat exchanger 1	H1 and C1	3600	266.90	1
Heat exchanger 2	H3 and C2	880	23.93	1
Heat exchanger 3	H2 and C1	890	43.72	1
Heat exchanger 4	H2 and C2	3910	530.94	1
Heat exchanger 5	H3 and C3	800	11.82	1
Hot utility 1	C1	767	5.58	1

For step 2 calculation, applying the topology data of step 1 designs the next model to obtain the detailed design for heat exchangers individually, the example of design variables is the design overall heat transfer coefficient (Ud) that deviate

from the original overall heat transfer coefficient used in step 1 calculation, pressure drop for shell side and tube side, shell diameter, tube diameter, and tube length. Additional parameters display with their value in Table 4.12 and the detailed designs for five process heat exchangers in Figure 4.2 with their pumping costs and corrected area costs are shown in Table 4.13.

Table 4.12 Additional parameters for step 2 calculation of example 2

Parameter	Value (unit)
PC	1.3 ($/W.year)
km	15 (W/m.K)
e	0.000002 (m)
CTP	0.9 (-)

Table 4.13 Design variables for each heat exchangers in example 2

	Exchanger 1	Exchanger 2	Exchanger 3	Exchanger 4	Exchanger 5
Area (m^2)	341.75	29.99	49.39	600.31	10.54
Duty (kW)	3600	880	890	3910	800
Mt (kg/s)	20.40	24.40	20.40	24.40	65.20
Ms (kg/s)	16.30	32.60	12.09	53.11	32.60
NS	1	1	1	2	1
Ntp	2	1	1	2	1
Ds (m)	0.74	0.49	0.49	0.76	0.53
Nt	1537	169	675	1622	88
Nb	7	1	3	2	1
do (m)	0.01270	0.02540	0.01270	0.01270	0.02540
di (m)	0.01021	0.02291	0.01021	0.01021	0.02291
Lt (m)	5.57	2.22	1.83	4.64	1.00
vt (m/s)	0.51	0.55	0.58	0.58	1.18

จุฬาลงกรณ์มหาวิทยาลัย
CHULALONGKORN UNIVERSITY

	Exchanger 1	Exchanger 2	Exchanger 3	Exchanger 4	Exchanger 5
vs (m/s)	0.25	0.47	0.42	0.36	0.97
Pt (m)	0.01588	0.03175	0.01588	0.01588	0.03175
ht ($W/m^2.K$)	905.1	819.0	1004.1	1000.4	1373.5
hs ($W/m^2.K$)	801.9	833.1	1073.7	976.0	1031.2
U ($W/m^2.K$)	368.5	378.6	442.0	423.7	544.2
Ud ($W/m^2.K$)	346.8	355.7	411.1	395.2	498.1
ΔPt (Pa)	3251	602	964	7065	1974
ΔPs (Pa)	2975	684	2576	4375	1681
Pitch layout	Square	Square	Square	Square	Square
Pumping cost ($/year)	235.42	75.85	104.16	829.93	376.34
Area cost ($/year)	1987.83	461.63	622.81	3677.80	246.46

Table 4.14 is the comparison between step 1 calculation and step 2 calculation which illustrate the conceptual area from step 1 and corrected area from step 2, overall heat transfer coefficient from step 1 and design overall heat transfer coefficient from step 2. However, the topology does not change after updating the design overall heat transfer coefficient and area costs for this example too, so no need to repeat the step 2 again and Figure 4.2 is the final design network with detailed designs in Table 4.13.

Table 4.14 Comparison of step 1 calculation and step 2 calculation of example 2

	Step 1		Step 2	
	Conceptual Area (m^2)	U ($W/m^2.K$)	Corrected Area (m^2)	Ud ($W/m^2.K$)
Heat exchanger 1	266.90	444	341.75	346.8

	Step 1		Step 2	
	Conceptual Area (m^2)	U ($W/m^2.K$)	Corrected Area (m^2)	Ud ($W/m^2.K$)
Heat exchanger 2	23.93	444	29.99	355.7
Heat exchanger 3	43.72	444	49.39	411.1
Heat exchanger 4	530.94	444	600.31	395.2
Heat exchanger 5	11.82	444	10.54	498.1

After 2 step designs and updating of this example, we can ensure that topology with detailed design is practical and can apply in the real industry by minimum the total annual cost of the design network. Moreover, the comparison of total annual cost divided into utility costs, corrected area costs, pumping costs, and fixed costs is shown in Table 4.15.

Table 4.15 Summary of TAC compared with other studies for example 2

	This study	Kazi (2021a)	Kazi (2021b)	Mizutani (2003)	Ravagnani and Caballero (2007)
Total annual Cost ($/year)	61,784.28	74,217.37	76,686.29	190,532.00	74,165.48
Utility Cost ($/year)	45,997.80	46,200.00	46,200.00	173,456.00	46,200.00
Area Cost ($/year)	7,164.79	8,135.85	8,410.50	3,388.00	13,887.57
Pumping Cost ($/year)	1,621.69	9,509.85	13,075.79	17,076	2,077.91

จุฬาลงกรณ์มหาวิทยาลัย
CHULALONGKORN UNIVERSITY

	This study	Kazi (2021a)	Kazi (2021b)	Mizutani (2003)	Ravagnani and Caballero (2007)
Fixed Cost ($/year)	7,000.00	10,000.00	9,000.00	9,000.00	11,000.00
Number of exchangers	7	10	9	9	11

4.1.3 Example 3

This example is the most complex case that has a mass flow rate of streams larger values than previous examples, and some parameters are not equal to be used in example 2 such as the temperature of utilities. The data of 7 hot streams and 3 cold streams, including mass flow rate, supply temperature, and target temperature, are shown in Table 4.16. The parameter of this example shows in Table 4.17 and also assume the overall heat transfer coefficient as the same value as the utilities to be constant for every heat exchanger.

Table 4.16 Stream data for example 3 (Mizutani, 2003)

	m (kg/s)	T^S (K)	T^T (K)
H1	134.0	413	313
H2	235.0	433	393
H3	12.1	483	318
H4	28.5	533	333
H5	102	553	483
H6	14.2	623	443
H7	38.9	653	433
C1	235.0	543	658
C2	143.0	403	543
C3	104.0	293	403

จุฬาลงกรณ์มหาวิทยาลัย
CHULALONGKORN UNIVERSITY

Table 4.17 Parameter data for example 3 (Mizutani, 2003)

Parameter	Value (unit)
CUcost	6 ($/kW.year)
HUcost	60 ($/kW.year)
Fcost	1000 ($/year)
AC	60 ($/m^2.year)
AE	0.6 (-)
NS	4 (-)
U	0.444 (kW/m^2.K)
EMAT	3 (K)
Thuin	700 (K)
Thuout	700 (K)
Tcuin	293 (K)
Tcuout	298 (K)

For step 1 calculation, we assume number of shells to be equal to four for heat exchangers and use 5 number of stages (NOK) to obtain the result of TAC that consists of utility costs, area costs, and fixed costs in annualize forms. The minimum-cost HEN result with topology is shown in Figure 4.3 including thirteen heat exchangers, four cold utilities, and a hot utility. Table 4.18 display the general design for heat exchanger where the number of exchangers is the number of shells for heat exchangers and they are always equal to one for hot utilities and cold utilities, additionally, number of exchangers related to annual fixed cost.

จุฬาลงกรณ์มหาวิทยาลัย
Chulalongkorn University

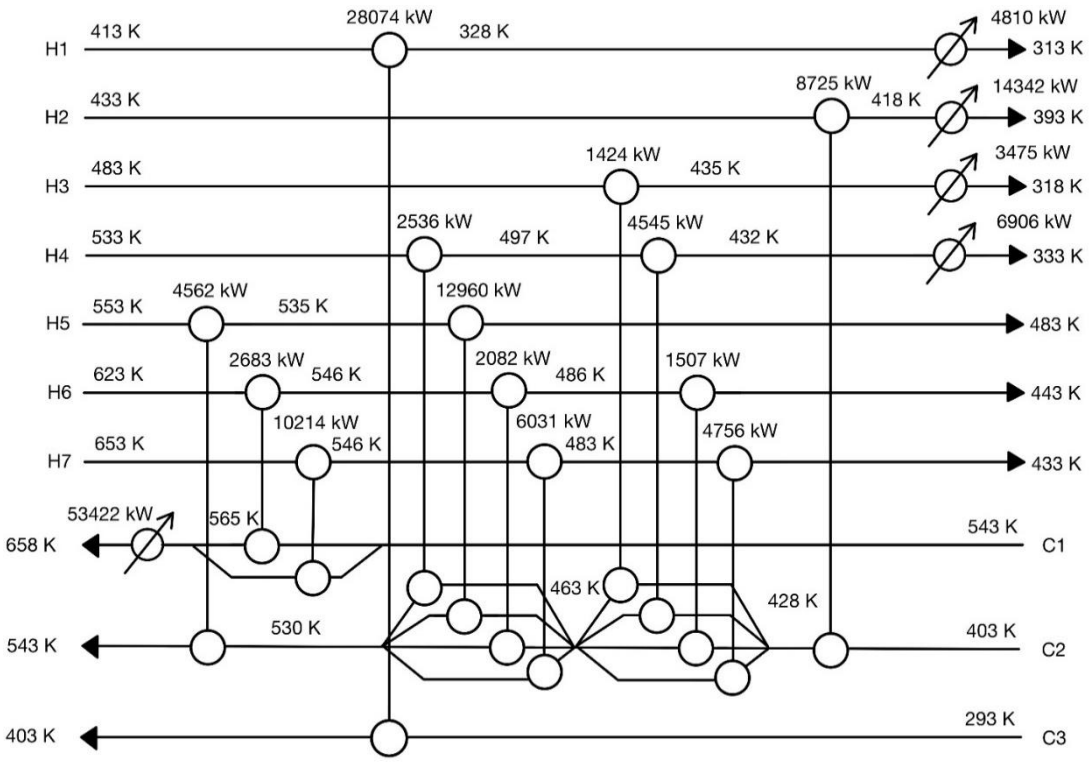

Figure 4.3 Minimum-cost network synthesis from step 1 calculation for example 3 (initially).

Table 4.18 General design of heat exchangers and utilities from step 1 calculation for example 3 (initially)

	Stream link	Duty (kW)	Area (m^2)	Number of exchangers
Heat exchanger 1	H5 and C2	4562	1453.51	4
Heat exchanger 2	H6 and C1	2683	320.22	4
Heat exchanger 3	H7 and C1	10214	887.70	4
Heat exchanger 4	H1 and C3	28074	3186.42	4
Heat exchanger 5	H4 and C2	2536	442.65	4
Heat exchanger 6	H5 and C2	12960	2719.11	4
Heat exchanger 7	H6 and C2	2082	240.20	4
Heat exchanger 8	H7 and C2	6031	755.83	4

	Stream link	Duty (kW)	Area (m^2)	Number of exchangers
Heat exchanger 9	H3 and C2	1424	254.47	4
Heat exchanger 10	H4 and C2	4545	732.26	4
Heat exchanger 11	H6 and C2	1507	178.43	4
Heat exchanger 12	H7 and C2	4756	975.68	4
Heat exchanger 13	H2 and C2	8725	2145.34	4
Cold utility 1	H1	4810	442.18	1
Cold utility 2	H2	14342	294.63	1
Cold utility 3	H3	3475	118.54	1
Cold utility 4	H4	6906	200.14	1
Hot utility 1	C1	53422	1512.10	1

For step 2 calculation, applying the topology data of step 1 designs the next model to obtain the detailed design for heat exchangers individually, the example of design variables is the design overall heat transfer coefficient (Ud) that deviate from the original overall heat transfer coefficient used in step 1 calculation, pressure drop for shell side and tube side, shell diameter, tube diameter, and tube length. Additional parameters display with their value in Table 4.19 and the detailed designs for thirteen process heat exchangers in Figure 4.3 with their pumping costs and corrected area costs are shown in Table 4.20, 4.21 and 4.22.

จุฬาลงกรณ์มหาวิทยาลัย
CHULALONGKORN UNIVERSITY

Table 4.19 Additional parameters for step 2 calculation of example 3

Parameter	Value (unit)
PC	0.7 ($/W.year)
km	15 (W/m.K)
e	0.000002 (m)
CTP	0.9 (-)

Table 4.20 Design variables for each heat exchangers (Exchanger 1 to 5) in example 3

	Exchanger 1	Exchanger 2	Exchanger 3	Exchanger 4	Exchanger 5
Area (m^2)	1006.47	387.33	1004.52	2877.32	369.95
Duty (kW)	4562	2683	10214	28074	2536
Mt (kg/s)	143.00	48.89	186.11	104.00	15.36
Ms (kg/s)	102.00	14.20	38.90	134.00	28.50
NS	2	2	2	4	3
Ntp	2	2	2	4	3
Ds (m)	1.03	0.97	1.50	1.45	0.57
Nt	3000	1176	1577	2620	906
Nb	2	8	7	2	4
do (m)	0.01270	0.01905	0.02540	0.01905	0.01270
di (m)	0.01021	0.01656	0.02291	0.01656	0.01021
Lt (m)	4.20	2.75	3.99	4.59	3.41
vt (m/s)	1.84	0.61	0.90	1.16	0.98
vs (m/s)	0.56	0.38	0.41	0.48	0.58
Pt (m)	0.01588	0.02381	0.03175	0.02381	0.01588
ht ($W/m^2.K$)	2517.0	944.7	1213.6	1585.1	1522.7
hs ($W/m^2.K$)	1245.4	839.0	771.9	954.4	1275.5
U ($W/m^2.K$)	719.7	400.2	435.4	537.0	590.6
Ud ($W/m^2.K$)	641.2	374.7	405.4	492.1	536.7
ΔPt (Pa)	54684	3773	7841	67291	33319
ΔPs (Pa)	13273	11468	13005	17440	19725
Pitch layout	Square	Square	Square	Square	Square
Pumping cost ($/year)	10128.58	383.44	2169.76	10307.02	1185.78
Area cost ($/year)	5014.68	2827.58	5008.84	12427.05	3235.08

จุฬาลงกรณ์มหาวิทยาลัย
Chulalongkorn University

Table 4.21 Design variables for each heat exchangers (Exchanger 6 to 10) in example 3

	Exchanger 6	Exchanger 7	Exchanger 8	Exchanger 9	Exchanger 10
Area (m^2)	1973.39	223.75	875.35	261.62	895.41
Duty (kW)	12960	2082	6031	1424	4545
Mt (kg/s)	78.50	12.61	36.53	16.65	53.13
Ms (kg/s)	102.00	14.20	38.90	12.10	28.50
NS	3	3	3	1	2
Ntp	3	3	3	3	2
Ds (m)	1.03	0.57	1.02	0.66	1.01
Nt	2980	918	1284	1218	1278
Nb	3	4	4	11	8
do (m)	0.01270	0.01270	0.01905	0.01270	0.01905
di (m)	0.01021	0.01021	0.01656	0.01021	0.01656
Lt (m)	5.53	2.04	3.80	5.38	5.85
vt (m/s)	1.52	0.79	0.63	0.79	0.61
vs (m/s)	0.56	0.48	0.40	0.32	0.34
Pt (m)	0.01588	0.01588	0.02381	0.01588	0.02381
ht ($W/m^2.K$)	2166.2	1286.8	964.7	1281.9	944.8
hs ($W/m^2.K$)	1256.8	1150.7	864.3	924.4	794.2
U ($W/m^2.K$)	683.9	518.7	410.1	466.3	389.8
Ud ($W/m^2.K$)	612.6	476.6	383.4	432.1	365.5
ΔPt (Pa)	105910	16397	10612	10417	5907
ΔPs (Pa)	27259	14147	11012	6342	9980
Pitch layout	Square	Square	Square	Square	Square
Pumping cost ($/year)	12249.32	450.11	900.94	276.24	660.55
Area cost ($/year)	8833.38	2392.54	5423.87	1693.36	4674.96

จุฬาลงกรณ์มหาวิทยาลัย
Chulalongkorn University

Table 4.22 Design variables for each heat exchangers (Exchanger 11 to 13) in example 3

	Exchanger 11	Exchanger 12	Exchanger 13
Area (m^2)	168.11	1120.44	1764.00
Duty (kW)	1507	4756	8725
Mt (kg/s)	17.62	55.60	143.00
Ms (kg/s)	14.20	38.90	235.00
NS	2	3	3
Ntp	2	3	3
Ds (m)	0.52	1.20	1.50
Nt	764	1801	2804
Nb	4	4	1
do (m)	0.01270	0.01905	0.01905
di (m)	0.01021	0.01656	0.01656
Lt (m)	2.76	3.47	3.50
vt (m/s)	0.89	0.68	1.12
vs (m/s)	0.39	0.37	0.71
Pt (m)	0.01588	0.02381	0.02381
ht ($W/m^2.K$)	1408.0	1029.8	1538.8
hs ($W/m^2.K$)	1024.4	828.2	1183.9
U ($W/m^2.K$)	512.3	414.3	594.8
Ud ($W/m^2.K$)	471.3	387.1	540.2
ΔPt (Pa)	10760	11736	30352
ΔPs (Pa)	5869	11331	18334
Pitch layout	Square	Square	Square
Pumping cost ($/year)	301.31	1207.07	9549.00
Area cost ($/year)	1713.66	6289.74	8258.44

จุฬาลงกรณ์มหาวิทยาลัย
Chulalongkorn University

Table 4.23 is the comparison between step 1 calculation and step 2 calculation which show the conceptual area from step 1 and corrected area from step 2, overall heat transfer coefficient from step 1 and design overall heat transfer coefficient from step 2.

Table 4.23 Comparison of step 1 calculation and step 2 calculation of example 3

	Step 1		Step 2	
	Conceptual Area (m^2)	U ($W/m^2.K$)	Corrected Area (m^2)	Ud ($W/m^2.K$)
Heat exchanger 1	1453.51	444	1006.47	641.2
Heat exchanger 2	320.22	444	387.33	374.7
Heat exchanger 3	887.70	444	1004.52	405.4
Heat exchanger 4	3186.42	444	2877.32	492.1
Heat exchanger 5	442.65	444	369.95	536.7
Heat exchanger 6	2719.11	444	1973.39	612.6
Heat exchanger 7	240.20	444	223.75	476.6
Heat exchanger 8	755.83	444	875.35	383.4
Heat exchanger 9	254.47	444	261.62	432.1
Heat exchanger 10	732.26	444	895.41	365.5

จุฬาลงกรณ์มหาวิทยาลัย
Chulalongkorn University

	Step 1		Step 2	
	Conceptual Area (m^2)	U ($W/m^2.K$)	Corrected Area (m^2)	Ud ($W/m^2.K$)
Heat exchanger 11	178.43	444	168.11	471.3
Heat exchanger 12	975.68	444	1120.44	387.1
Heat exchanger 13	2145.34	444	1764.00	540.2

Next, using variables from step 2 calculation update to step 1 calculation that will get a new topology as shown in Figure 4.4 including eleven heat exchangers, four cold utilities, and a hot utility and the new general design for heat exchangers after updating the variables from step 2 calculation illustrated in Table 4.24.

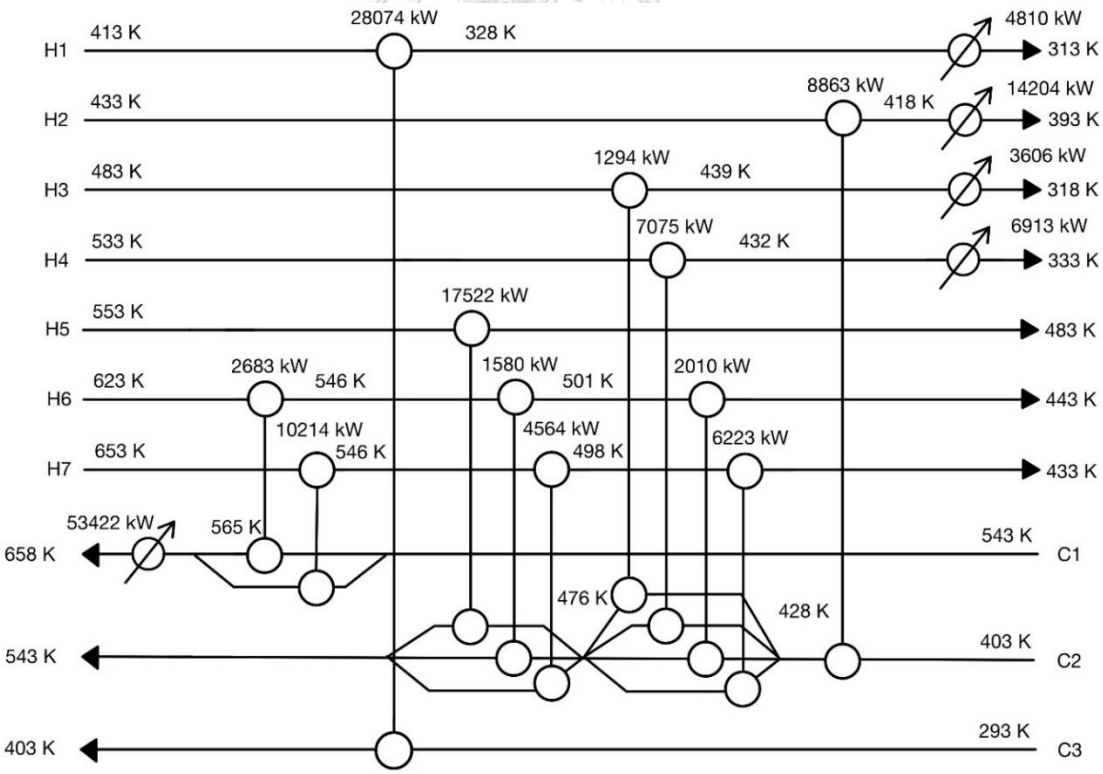

Figure 4.4 Minimum-cost HENS from step 1 calculation for example 3 (1st updating).

Table 4.24 General design of heat exchangers and utilities from step 1 calculation for example 3 (1st updating)

	Stream link	Duty (kW)	Area (m^2)	Number of exchangers
Heat exchanger 1	H6 and C1	2683	379.45	3
Heat exchanger 2	H7 and C1	10214	972.22	3
Heat exchanger 3	H5 and C2	17522	3304.68	3
Heat exchanger 4	H6 and C2	1580	316.58	3
Heat exchanger 5	H7 and C2	4564	1219.01	3
Heat exchanger 6	H1 and C3	28074	2874.96	3
Heat exchanger 7	H3 and C2	1294	326.05	3
Heat exchanger 8	H4 and C2	7075	980.33	3
Heat exchanger 9	H6 and C2	2010	219.03	3
Heat exchanger 10	H7 and C2	6223	1401.77	3
Heat exchanger 11	H2 and C2	8863	1868.12	3
Cold utility 1	H1	4810	442.18	1
Cold utility 2	H2	14204	292.10	1
Cold utility 3	H3	3606	120.53	1
Cold utility 4	H4	6913	200.25	1
Hot utility 1	C1	53422	1512.10	1

จุฬาลงกรณ์มหาวิทยาลัย
Chulalongkorn University

After 1st updating, step 2 calculation requires to synthesize the detail design model for individual heat exchangers again and the detailed designs for eleven process heat exchangers in Figure 4.4 with their pumping costs and corrected area costs are shown in Table 4.25, 4.26 and 4.27.

Table 4.25 Design variables for each heat exchangers (Exchanger 1 to 5) in example 3 (1st updating)

	Exchanger 1	Exchanger 2	Exchanger 3	Exchanger 4	Exchanger 5
Area (m^2)	387.33	1004.52	3989.13	369.42	1153.31
Duty (kW)	2683	10214	17522	1580	4564
Mt (kg/s)	48.89	186.11	105.88	9.55	27.58
Ms (kg/s)	14.20	38.90	102.00	14.20	38.90
NS	2	2	5	2	3
Ntp	2	2	5	6	3
Ds (m)	0.97	1.50	1.50	0.74	0.93
Nt	1176	1577	2804	1536	2438
Nb	8	7	3	5	3
do (m)	0.01905	0.02540	0.01905	0.01270	0.01270
di (m)	0.01656	0.02291	0.01656	0.01021	0.01021
Lt (m)	2.75	3.99	4.75	3.01	3.95
vt (m/s)	0.61	0.90	1.38	0.72	0.65
vs (m/s)	0.38	0.41	0.45	0.30	0.33
Pt (m)	0.02381	0.03175	0.02381	0.01588	0.01588
ht ($W/m^2.K$)	944.7	1213.6	1820.7	1187.8	1101.5
hs ($W/m^2.K$)	839.0	771.9	926.1	890.0	940.4
U ($W/m^2.K$)	400.2	435.4	555.4	441.9	437.6
Ud ($W/m^2.K$)	374.7	405.4	507.5	411.0	407.3
ΔPt (Pa)	3773	7841	148640	23081	17568
ΔPs (Pa)	11468	13005	27230	6285	9494
Pitch layout	Square	Square	Square	Square	Square
Pumping cost ($/year)	383.44	2169.76	20443.14	341.81	942.69
Area cost ($/year)	2827.58	5008.84	16529.74	2748.35	6399.80

จุฬาลงกรณ์มหาวิทยาลัย
Chulalongkorn University

Table 4.26 Design variables for each heat exchangers (Exchanger 6 to 10) in example 3 (1st updating)

	Exchanger 6	Exchanger 7	Exchanger 8	Exchanger 9	Exchanger 10
Area (m^2)	2877.32	343.87	756.33	240.91	1058.36
Duty (kW)	28074	1294	7075	2010	6223
Mt (kg/s)	104.00	11.14	60.94	17.31	53.61
Ms (kg/s)	134.00	12.10	28.50	14.20	38.90
NS	4	1	3	2	3
Ntp	4	7	3	2	3
Ds (m)	1.45	0.90	1.03	0.58	0.94
Nt	2620	2273	3000	935	2500
Nb	2	11	2	5	3
do (m)	0.01905	0.01270	0.01270	0.01270	0.01270
di (m)	0.01656	0.01021	0.01021	0.01021	0.01021
Lt (m)	4.59	3.79	2.11	3.23	3.54
vt (m/s)	1.16	0.66	1.17	0.71	1.24
vs (m/s)	0.48	0.34	0.31	0.36	0.37
Pt (m)	0.02381	0.01588	0.01588	0.01588	0.01588
ht ($W/m^2.K$)	1585.1	1111.4	1759.6	1181.2	1837.5
hs ($W/m^2.K$)	954.4	944.2	903.3	982.2	992.8
U ($W/m^2.K$)	537.0	440.4	524.6	462.2	562.9
Ud ($W/m^2.K$)	492.1	409.7	481.6	428.5	513.7
ΔPt (Pa)	67291	13535	34756	7952	52710
ΔPs (Pa)	17440	9289	6920	6784	11490
Pitch layout	Square	Square	Square	Square	Square
Pumping cost ($/year)	10307.02	290.61	2556.24	258.34	3613.26
Area cost ($/year)	12427.05	1995.21	4968.50	2126.53	6078.28

จุฬาลงกรณ์มหาวิทยาลัย
Chulalongkorn University

Table 4.27 Design variables for each heat exchangers (Exchanger 11 to 13) in example 3 (1st updating)

	Exchanger 11
Area (m^2)	1874.99
Duty (kW)	8863
Mt (kg/s)	143.00
Ms (kg/s)	235.00
NS	3
Ntp	3
Ds (m)	1.45
Nt	2620
Nb	1
do (m)	0.01905
di (m)	0.01656
Lt (m)	3.99
vt (m/s)	1.20
vs (m/s)	0.64
Pt (m)	0.02381
ht ($W/m^2.K$)	1624.6
hs ($W/m^2.K$)	1123.7
U ($W/m^2.K$)	592.8
Ud ($W/m^2.K$)	538.5
ΔPt (Pa)	36993
ΔPs (Pa)	14923
Pitch layout	Square
Pumping cost ($/year)	9712.84
Area cost ($/year)	8566.40

จุฬาลงกรณ์มหาวิทยาลัย
Chulalongkorn University

Table 4.28 is the comparison between step 1 calculation and step 2 calculation after 1st updating which illustrate the conceptual area from step 1 and corrected area from step 2, overall heat transfer coefficient from step 1 and design overall heat transfer coefficient from step 2.

Table 4.28 Comparison of step 1 calculation and step 2 calculation of example 3 (1st updating)

	Step 1		Step 2	
	Conceptual Area (m^2)	U ($W/m^2.K$)	Corrected Area (m^2)	Ud ($W/m^2.K$)
Heat exchanger 1	379.45	374.7	387.33	374.7
Heat exchanger 2	972.22	405.4	1004.52	405.4
Heat exchanger 3	3304.68	612.6	3989.13	507.5
Heat exchanger 4	316.58	476.6	369.42	411.0
Heat exchanger 5	1219.01	383.4	1153.31	407.3
Heat exchanger 6	2874.96	492.1	2877.32	492.1
Heat exchanger 7	326.05	432.1	343.87	409.7
Heat exchanger 8	980.33	365.5	756.33	481.6
Heat exchanger 9	219.03	471.3	240.91	428.5
Heat exchanger 10	1401.77	387.1	1058.36	513.7

จุฬาลงกรณ์มหาวิทยาลัย
CHULALONGKORN UNIVERSITY

	Step 1		Step 2	
	Conceptual Area (m^2)	U ($W/m^2.K$)	Corrected Area (m^2)	Ud ($W/m^2.K$)
Heat exchanger 11	1868.12	540.2	1874.99	538.5

However, the topology after 2nd updating is returned as initial topology design and it means that this example does not have any more topology design, so we must consider the TAC between initial design topology and 1st updating topology. The comparison of TAC that has corrected area costs and included pumping costs between initial design and 1st updating design is shown in Table 4.29.

Table 4.29 The comparison of TAC among updating for example 3

	Initial Topology Design	1st Updating Topology Design
Total annual Costs ($/year)	3,549,559.87	3,549,694.65
Utility Cost ($/year)	3,382,512.11	3,382,512.11
Area Cost ($/year)	79,278.64	81,163.39
Pumping Cost ($/year)	49,769.12	51,019.15
Fixed Cost ($/year)	38,000.00	35,000.00
Number of exchangers	38	35

The TAC of the initial topology design is less than 1st updating design, but the two topologies are not significantly different in the total annual cost. In this situation, we will select the minimum-cost of HENS as shown in Figure 4.3 to be the

final topology and come along with the detailed design for each heat exchanger as displayed in Table 4.20, 4.21, and 4.22. Latterly, the comparison of this example with other studies is illustrated in the Table 4.30.

Table 4.30 Summary of TAC compared with other studies for example 3

	This study	Kazi (2021a)	Kazi (2021b)	Short (2016)	Mizutani (2003)
Total annual Costs ($/year)	3,549,559.87	3,766,112	3,679,782	4,203,057	5,183,221
Utility Cost ($/year)	3,382,512.11	3,529,527	3,496,972	4,091,975	5,154,291
Area Cost ($/year)	79,278.64	76,620	77,118	42,982	11,123
Pumping Cost ($/year)	49,769.12	113,965	67,692	46,099	4807
Fixed Cost ($/year)	38,000.00	46,000	38,000	22,000	13,000

จุฬาลงกรณ์มหาวิทยาลัย
CHULALONGKORN UNIVERSITY

4.1.4 Example 4

This example is actually the same as example 3, but the only difference is the value of EMAT (Exchanger minimum approach temperature) that is equal to 10 Kelvin for example 4 to see the effects of EMAT on the general design compared with example 3. Therefore, the stream data and parameter of step 1 calculation and step 2 calculation are also shown in Table 4.16, 6.17, and 6.19 respectively. For step 1 calculation, the minimum-cost HEN result with topology is shown in Figure 4.5 including eleven heat exchangers, four cold utilities, and a hot utility and Table 4.31 display the general design for heat exchanger of the example 4. For step 2 calculation, applying the topology data of step 1 designs the next model to obtain the detailed design for heat exchangers individually, the example of design variables is the design overall heat transfer coefficient (Ud) that deviate from the original overall heat

transfer coefficient used in step 1 calculation, pressure drop for shell side and tube side, shell diameter, tube diameter, and tube length. The detailed designs for eleven process heat exchangers in Figure 4.5 with their pumping costs and corrected area costs are shown in Table 4.32, 4.33 and 4.34.

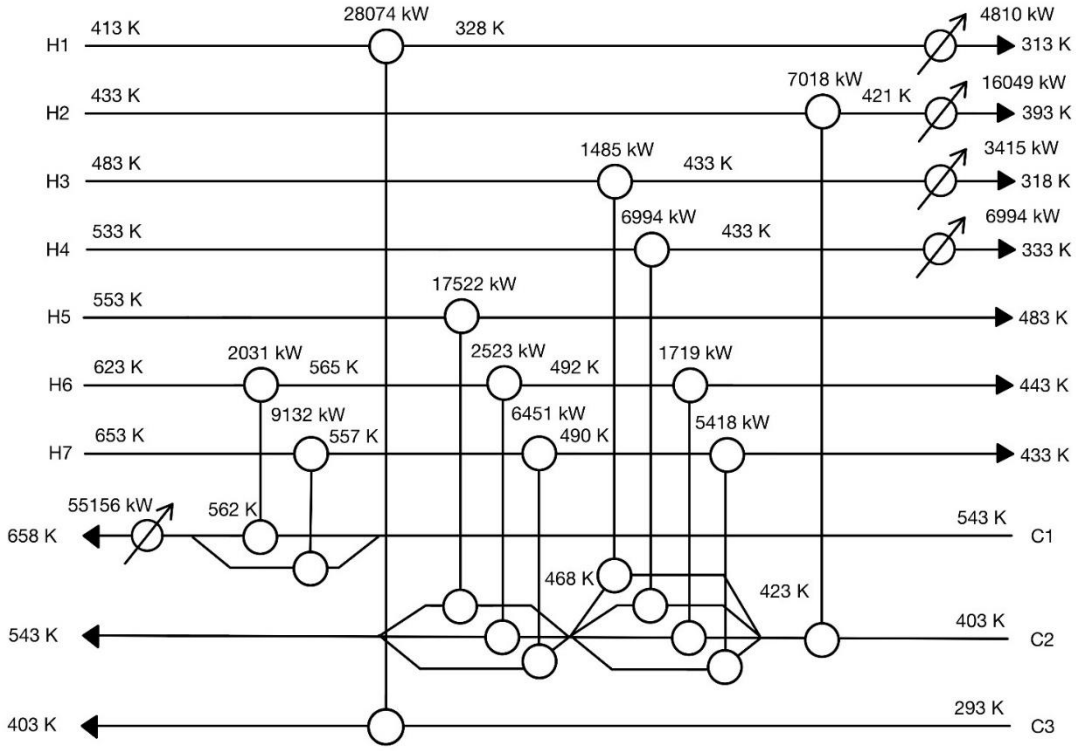

Figure 4.5 Minimum-cost HENS from step 1 calculation for example 4 (initially).

จุฬาลงกรณ์มหาวิทยาลัย
Chulalongkorn University

Table 4.31 General design of heat exchangers and utilities from step 1 calculation for example 4

	Stream link	Duty (kW)	Area (m^2)	Number of exchangers
Heat exchanger 1	H6 and C1	2031	120.63	3
Heat exchanger 2	H7 and C1	9132	495.30	3
Heat exchanger 3	H5 and C2	17522	3144.47	3
Heat exchanger 4	H6 and C2	2523	244.48	3
Heat exchanger 5	H7 and C2	6451	806.75	3

	Stream link	Duty (kW)	Area (m^2)	Number of exchangers
Heat exchanger 6	H1 and C3	28074	3186.42	3
Heat exchanger 7	H3 and C2	1485	266.44	3
Heat exchanger 8	H4 and C2	6994	531.35	3
Heat exchanger 9	H6 and C2	1719	173.40	3
Heat exchanger 10	H7 and C2	5418	796.40	3
Heat exchanger 11	H2 and C2	7018	1167.44	3
Cold utility 1	H1	4810	442.18	1
Cold utility 2	H2	16049	325.58	1
Cold utility 3	H3	3415	117.60	1
Cold utility 4	H4	6994	201.55	1
Hot utility 1	C1	55156	1540.71	1

Table 4.32 Design variables for each heat exchangers (Exchanger 1 to 5) in example 4

	Exchanger 1	Exchanger 2	Exchanger 3	Exchanger 4	Exchanger 5
Area (m^2)	140.50	562.63	2832.45	249.29	879.09
Duty (kW)	2031	9132	17522	2523	6451
Mt (kg/s)	42.76	192.25	94.57	13.62	34.82
Ms (kg/s)	14.20	38.90	102.00	14.20	38.90
NS	1	1	4	1	2
Ntp	1	1	4	4	2
Ds (m)	0.64	0.96	1.35	0.70	0.86
Nt	1150	2600	2271	1388	2055
Nb	7	6	3	9	4
do (m)	0.01270	0.01270	0.01905	0.01270	0.01270
di (m)	0.01021	0.01021	0.01656	0.01021	0.01021
Lt (m)	3.06	5.42	5.21	4.50	5.36

จุฬาลงกรณ์มหาวิทยาลัย
CHULALONGKORN UNIVERSITY

	Exchanger 1	Exchanger 2	Exchanger 3	Exchanger 4	Exchanger 5
vt (m/s)	0.72	1.43	1.22	0.76	0.65
vs (m/s)	0.46	0.41	0.46	0.35	0.33
Pt (m)	0.01588	0.01588	0.02381	0.01588	0.01588
ht ($W/m^2.K$)	1185.0	2054.1	1647.1	1237.2	1100.3
hs ($W/m^2.K$)	1119.1	1056.1	933.2	972.0	942.4
U ($W/m^2.K$)	491.2	608.0	538.0	470.2	437.8
Ud ($W/m^2.K$)	453.4	551.0	492.9	435.4	407.5
ΔPt (Pa)	1933	10259	79512	11190	9792
ΔPs (Pa)	7706	8379	20103	6655	7313
Pitch layout	Square	Square	Square	Square	Square
Pumping cost ($/year)	212.07	2537.40	10566.19	272.56	690.52
Area cost ($/year)	1166.14	2680.93	12310.41	1645.03	4623.62

Table 4.33 Design variables for each heat exchangers (Exchanger 6 to 10) in example 4

	Exchanger 6	Exchanger 7	Exchanger 8	Exchanger 9	Exchanger 10
Area (m^2)	2877.32	265.37	504.80	165.28	672.72
Duty (kW)	28074	1485	6994	1719	5418
Mt (kg/s)	104.00	13.60	64.05	15.74	49.62
Ms (kg/s)	134.00	12.10	28.50	14.20	38.90
NS	4	2	2	2	3
Ntp	4	2	2	2	3
Ds (m)	1.45	0.50	1.02	0.50	0.94
Nt	2620	711	2900	688	2500
Nb	2	9	3	4	2

จุฬาลงกรณ์มหาวิทยาลัย
Chulalongkorn University

	Exchanger 6	Exchanger 7	Exchanger 8	Exchanger 9	Exchanger 10
do (m)	0.01905	0.01270	0.01270	0.01270	0.01270
di (m)	0.01656	0.01021	0.01021	0.01021	0.01021
Lt (m)	4.59	4.68	2.18	3.01	2.25
vt (m/s)	1.16	0.74	0.85	0.88	1.15
vs (m/s)	0.48	0.41	0.41	0.38	0.43
Pt (m)	0.02381	0.01588	0.01588	0.01588	0.01588
ht ($W/m^2.K$)	1585.1	1212.1	1360.2	1399.2	1727.2
hs ($W/m^2.K$)	954.4	1047.6	1047.7	1004.7	1087.3
U ($W/m^2.K$)	537.0	482.4	509.9	505.9	577.3
Ud ($W/m^2.K$)	492.1	445.8	469.2	465.8	525.7
ΔPt (Pa)	67291	10990	8624	11215	34504
ΔPs (Pa)	17440	12188	9851	5224	11627
Pitch layout	Square	Square	Square	Square	Square
Pumping cost ($/year)	10307.02	327.80	919.78	276.82	2389.60
Area cost ($/year)	12427.05	2253.60	3314.61	1696.24	4631.27

จุฬาลงกรณ์มหาวิทยาลัย
CHULALONGKORN UNIVERSITY

Table 4.34 Design variables for each heat exchangers (Exchanger 11) in example 4

	Exchanger 11
Area (m^2)	1228.67
Duty (kW)	7018
Mt (kg/s)	143.00
Ms (kg/s)	235.00
NS	3
Ntp	3
Ds (m)	1.45

	Exchanger 11
Nt	2620
Nb	1
do (m)	0.01905
di (m)	0.01656
Lt (m)	2.61
vt (m/s)	1.20
vs (m/s)	0.98
Pt (m)	0.02381
ht ($W/m^2.K$)	1624.6
hs ($W/m^2.K$)	1417.8
U ($W/m^2.K$)	665.6
Ud ($W/m^2.K$)	598.0
ΔPt (Pa)	29898
ΔPs (Pa)	32071
Pitch layout	Square
Pumping cost ($/year)	13041.80
Area cost ($/year)	6647.53

จุฬาลงกรณ์มหาวิทยาลัย
Chulalongkorn University

Table 4.35 is the comparison between step 1 calculation and step 2 calculation which display the conceptual area from step 1 and corrected area from step 2, overall heat transfer coefficient from step 1 and design overall heat transfer coefficient from step 2.

Table 4.35 Comparison of step 1 calculation and step 2 calculation of example 4

	Step 1		Step 2	
	Conceptual Area (m^2)	U ($W/m^2.K$)	Corrected Area (m^2)	Ud ($W/m^2.K$)
Heat exchanger 1	120.63	444	140.50	453.4
Heat exchanger 2	495.30	444	562.63	551.0
Heat exchanger 3	3144.47	444	2832.45	492.9
Heat exchanger 4	244.48	444	249.29	435.4
Heat exchanger 5	806.75	444	879.09	407.5
Heat exchanger 6	3186.42	444	2877.32	492.1
Heat exchanger 7	266.44	444	265.37	445.8
Heat exchanger 8	531.35	444	504.80	469.2
Heat exchanger 9	173.40	444	165.28	465.8
Heat exchanger 10	796.40	444	672.72	525.7
Heat exchanger 11	1167.44	444	1228.67	598.0

Next, using variables from step 2 calculation update to step 1 calculation that call 1st updating and topology including eleven heat exchangers, four cold utilities, and a hot utility which are the same as initial design is shown in Figure 4.6, but heat duty of some exchangers and inlet/ outlet temperature to the heat exchangers

are different from initial design (note that some inlet/ outlet temperature is changed in second or third decimal places). The new general design for heat exchangers after updating the variables from step 2 calculation illustrated in Table 4.36. After 1st updating, step 2 calculation requires to synthesize the detail design model for individual heat exchangers again and the detailed designs for eleven process heat exchangers in Figure 4.6 with their pumping costs and corrected area costs are shown in Table 4.37, 4.38 and 4.39.

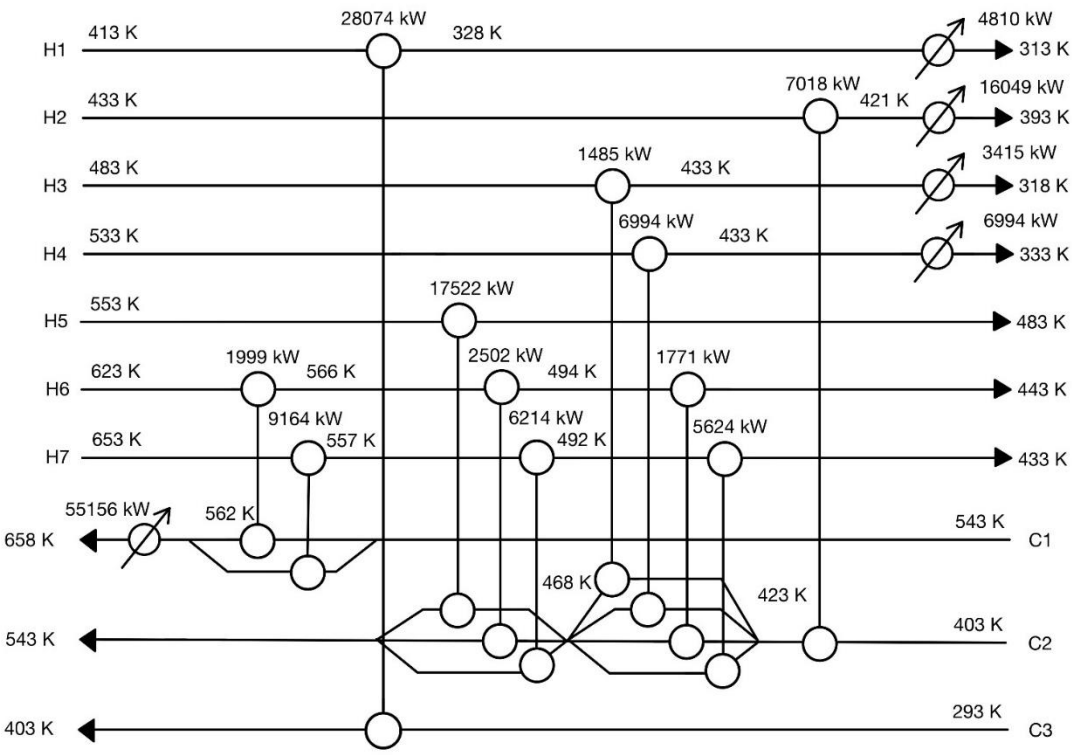

Figure 4.6 Minimum-cost HENS from step 1 calculation for example 4 (1st updating).

Table 4.36 General design of heat exchangers and utilities from step 1 calculation for example 4 (1st updating)

	Stream link	Duty (kW)	Area (m^2)	Number of exchangers
Heat exchanger 1	H6 and C1	1999	114.32	3
Heat exchanger 2	H7 and C1	9164	403.75	3

	Stream link	Duty (kW)	Area (m^2)	Number of exchangers
Heat exchanger 3	H5 and C2	17522	2906.92	3
Heat exchanger 4	H6 and C2	2502	238.60	3
Heat exchanger 5	H7 and C2	6214	827.87	3
Heat exchanger 6	H1 and C3	28074	2874.96	3
Heat exchanger 7	H3 and C2	1485	272.34	3
Heat exchanger 8	H4 and C2	6994	506.54	3
Heat exchanger 9	H6 and C2	1771	167.64	3
Heat exchanger 10	H7 and C2	5624	674.03	3
Heat exchanger 11	H2 and C2	7018	866.80	3
Cold utility 1	H1	4810	442.18	1
Cold utility 2	H2	16049	325.58	1
Cold utility 3	H3	3415	117.60	1
Cold utility 4	H4	6994	201.55	1
Hot utility 1	C1	55156	1540.71	1

Table 4.37 Design variables for each heat exchangers (Exchanger 1 to 5) in example 4 (1st updating)

จุฬาลงกรณ์มหาวิทยาลัย
CHULALONGKORN UNIVERSITY

	Exchanger 1	Exchanger 2	Exchanger 3	Exchanger 4	Exchanger 5
Area (m^2)	137.60	584.33	2927.04	243.55	808.98
Duty (kW)	1999	9164	17522	2502	6214
Mt (kg/s)	42.09	192.92	95.50	13.64	33.87
Ms (kg/s)	14.20	38.90	102.00	14.20	38.90
NS	1	1	4	1	2
Ntp	1	1	4	4	2
Ds (m)	0.58	0.96	1.35	0.70	0.83
Nt	934	2600	2271	1392	1946
Nb	5	6	3	8	4

	Exchanger 1	Exchanger 2	Exchanger 3	Exchanger 4	Exchanger 5
do (m)	0.01270	0.01270	0.01905	0.01270	0.01270
di (m)	0.01021	0.01021	0.01656	0.01021	0.01021
Lt (m)	3.69	5.63	5.38	4.39	5.21
vt (m/s)	0.87	1.43	1.23	0.76	0.67
vs (m/s)	0.32	0.40	0.44	0.33	0.35
Pt (m)	0.01588	0.01588	0.02381	0.01588	0.01588
ht ($W/m^2.K$)	1382.1	2059.7	1660.0	1235.8	1124.2
hs ($W/m^2.K$)	912.6	1034.4	916.5	929.8	971.8
U ($W/m^2.K$)	478.9	601.3	534.0	459.9	448.8
Ud ($W/m^2.K$)	442.8	545.5	489.5	426.6	417.0
ΔPt (Pa)	3126	10622	82654	10948	10054
ΔPs (Pa)	2662	7824	18942	5184	7874
Pitch layout	Square	Square	Square	Square	Square
Pumping cost ($/year)	187.02	2598.56	10848.29	246.09	714.14
Area cost ($/year)	1151.65	2742.50	12555.46	1622.18	4398.72

จุฬาลงกรณ์มหาวิทยาลัย
CHULALONGKORN UNIVERSITY

Table 4.38 Design variables for each heat exchangers (Exchanger 6 to 10) in example 4 (1st updating)

	Exchanger 6	Exchanger 7	Exchanger 8	Exchanger 9	Exchanger 10
Area (m^2)	2877.32	272.03	513.52	176.09	830.70
Duty (kW)	28074	1485	6994	1771	5624
Mt (kg/s)	104.00	13.38	63.01	15.96	50.66
Ms (kg/s)	134.00	12.10	28.50	14.20	38.90
NS	4	2	2	2	2
Ntp	4	2	2	2	2

	Exchanger 6	Exchanger 7	Exchanger 8	Exchanger 9	Exchanger 10
Ds (m)	1.45	0.49	1.02	0.54	0.94
Nt	2620	674	2900	818	2500
Nb	2	9	3	4	3
do (m)	0.01905	0.01270	0.01270	0.01270	0.01270
di (m)	0.01656	0.01021	0.01021	0.01021	0.01021
Lt (m)	4.59	5.06	2.22	2.70	4.16
vt (m/s)	1.16	0.77	0.84	0.75	0.78
vs (m/s)	0.48	0.39	0.40	0.38	0.31
Pt (m)	0.02381	0.01588	0.01588	0.01588	0.01588
ht ($W/m^2.K$)	1585.1	1248.6	1342.5	1231.7	1269.7
hs ($W/m^2.K$)	954.4	1018.3	1037.9	1017.5	907.5
U ($W/m^2.K$)	537.0	482.9	504.4	479.6	460.0
Ud ($W/m^2.K$)	492.1	446.3	464.6	443.4	426.6
ΔPt (Pa)	67291	12472	8448	7786	11214
ΔPs (Pa)	17440	10810	9550	5940	5700
Pitch layout	Square	Square	Square	Square	Square
Pumping cost ($/year)	10307.02	328.60	888.18	230.32	872.07
Area cost ($/year)	12427.05	2287.38	3348.88	1762.00	4469.20

Table 4.39 Design variables for each heat exchangers (Exchanger 11) in example 4 (1st updating)

	Exchanger 11
Area (m^2)	1678.57
Duty (kW)	7018
Mt (kg/s)	143.00

	Exchanger 11
Ms (kg/s)	235.00
NS	2
Ntp	2
Ds (m)	1.45
Nt	2619
Nb	1
do (m)	0.01905
di (m)	0.01656
Lt (m)	5.36
vt (m/s)	0.80
vs (m/s)	0.48
Pt (m)	0.02381
ht ($W/m^2.K$)	1174.9
hs ($W/m^2.K$)	955.4
U ($W/m^2.K$)	472.9
Ud ($W/m^2.K$)	437.7
ΔPt (Pa)	9211
ΔPs (Pa)	5832
Pitch layout	Square
Pumping cost ($/year)	2967.51
Area cost ($/year)	6815.95

จุฬาลงกรณ์มหาวิทยาลัย
CHULALONGKORN UNIVERSITY

Table 4.40 is the comparison between step 1 calculation and step 2 calculation after 1st updating which illustrate the conceptual area from step 1 and corrected area from step 2, overall heat transfer coefficient from step 1 and design overall heat transfer coefficient from step 2.

Table 4.40 Comparison of step 1 calculation and step 2 calculation of example 4 (1st updating)

	Step 1		Step 2	
	Conceptual Area (m^2)	U ($W/m^2.K$)	Corrected Area (m^2)	Ud ($W/m^2.K$)
Heat exchanger 1	114.32	453.4	137.60	442.8
Heat exchanger 2	403.75	551.0	584.33	545.5
Heat exchanger 3	2906.92	492.9	2927.04	489.5
Heat exchanger 4	238.60	435.4	243.55	426.6
Heat exchanger 5	827.87	407.5	808.98	417.0
Heat exchanger 6	2874.96	492.1	2877.32	492.1
Heat exchanger 7	272.34	445.8	272.03	446.3
Heat exchanger 8	506.54	469.2	513.52	464.6
Heat exchanger 9	167.64	465.8	176.09	443.4
Heat exchanger 10	674.03	525.7	830.70	426.6
Heat exchanger 11	866.80	598.0	1678.57	437.7

When comparing the TAC from the 1st updating design with the initial design found that the TAC of 1st updating design is less than the initial design, so we must do the 2nd updating to confirm the minimum TAC design. Using variables from

step 2 calculation of 1st updating input to step 1 calculation again then topology including eleven heat exchangers, four cold utilities, and a hot utility is shown in Figure 4.7. The new general design for heat exchangers after updating illustrated in Table 4.41. After 1st updating, step 2 calculation requires to synthesize the detail design model for individual heat exchangers again and the detailed designs for eleven process heat exchangers in Figure 4.7 with their pumping costs and corrected area costs are shown in Table 4.42, 4.43 and 4.44.

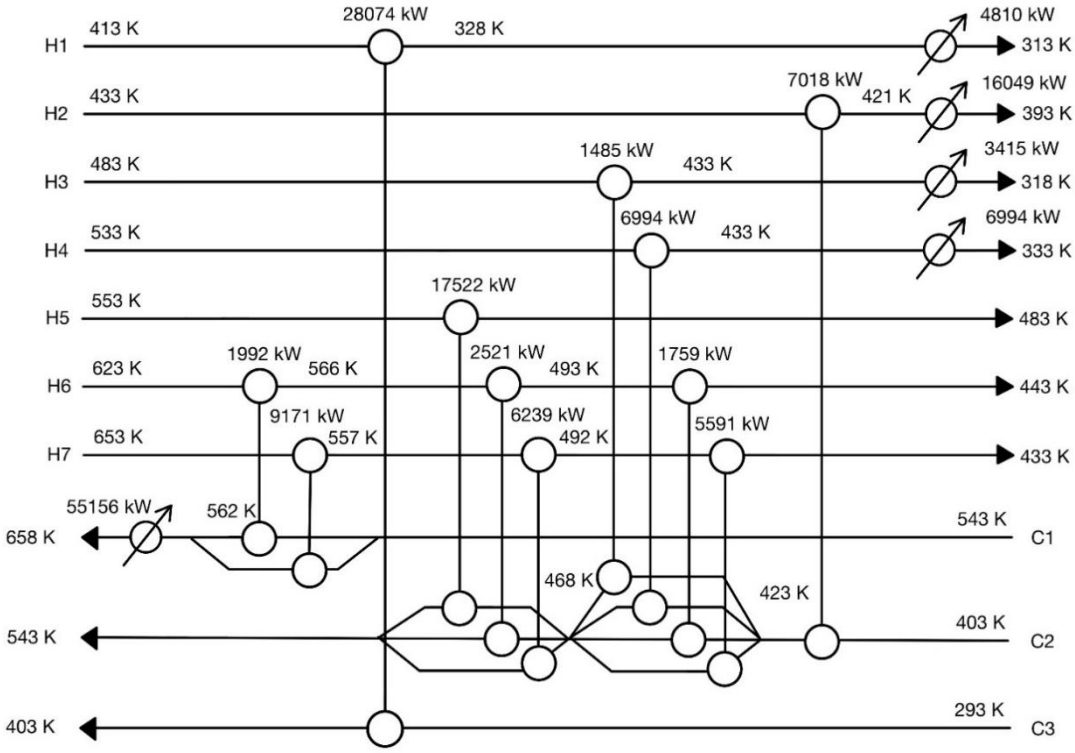

Figure 4.7 Minimum-cost HENS from step 1 calculation for example 4 (2nd updating).

Table 4.41 General design of heat exchangers and utilities from step 1 calculation for example 4 (2nd updating)

	Stream link	Duty (kW)	Area (m^2)	Number of exchangers
Heat exchanger 1	H6 and C1	1992	116.20	3
Heat exchanger 2	H7 and C1	9171	408.90	3
Heat exchanger 3	H5 and C2	17522	2913.66	3
Heat exchanger 4	H6 and C2	2521	245.44	3
Heat exchanger 5	H7 and C2	6239	818.36	3
Heat exchanger 6	H1 and C3	28074	2874.96	3
Heat exchanger 7	H3 and C2	1485	270.78	3
Heat exchanger 8	H4 and C2	6994	510.89	3
Heat exchanger 9	H6 and C2	1759	175.69	3
Heat exchanger 10	H7 and C2	5591	830.07	3
Heat exchanger 11	H2 and C2	7018	1184.24	3
Cold utility 1	H1	4810	442.18	1
Cold utility 2	H2	16049	325.58	1
Cold utility 3	H3	3415	117.60	1
Cold utility 4	H4	6994	201.55	1
Hot utility 1	C1	55156	1540.71	1

จุฬาลงกรณ์มหาวิทยาลัย
Chulalongkorn University

Table 4.42 Design variables for each heat exchangers (Exchanger 1 to 5) in example 4 (2nd updating)

	Exchanger 1	Exchanger 2	Exchanger 3	Exchanger 4	Exchanger 5
Area (m^2)	129.86	715.43	2909.97	245.63	822.63
Duty (kW)	1992	9171	17522	2521	6239
Mt (kg/s)	41.94	193.07	95.34	13.72	33.95
Ms (kg/s)	14.20	38.90	102.00	14.20	38.90

	Exchanger 1	Exchanger 2	Exchanger 3	Exchanger 4	Exchanger 5
NS	1	2	4	1	2
Ntp	1	2	4	4	2
Ds (m)	0.59	1.44	1.35	0.71	0.84
Nt	959	2600	2271	1396	1963
Nb	6	3	3	8	4
do (m)	0.01270	0.01905	0.01905	0.01270	0.01270
di (m)	0.01021	0.01656	0.01656	0.01021	0.01021
Lt (m)	3.39	2.30	5.35	4.41	5.25
vt (m/s)	0.84	1.09	1.23	0.76	0.67
vs (m/s)	0.40	0.37	0.45	0.32	0.35
Pt (m)	0.01588	0.02381	0.02381	0.01588	0.01588
ht ($W/m^2.K$)	1349.4	1502.6	1657.7	1239.0	1118.5
hs ($W/m^2.K$)	1033.0	829.8	919.4	926.2	965.2
U ($W/m^2.K$)	504.5	485.5	534.7	459.6	446.3
Ud ($W/m^2.K$)	464.6	448.5	490.1	426.3	414.8
ΔPt (Pa)	2792	10430	82089	11058	10002
ΔPs (Pa)	4731	7308	19144	5125	7733
Pitch layout	Square	Square	Square	Square	Square
Pumping cost ($/year)	203.46	2537.30	10796.63	247.83	707.03
Area cost ($/year)	1112.33	4086.03	12511.47	1630.51	4443.10

Table 4.43 Design variables for each heat exchangers (Exchanger 6 to 10) in example 4 (2nd updating)

	Exchanger 6	Exchanger 7	Exchanger 8	Exchanger 9	Exchanger 10
Area (m^2)	2877.32	270.03	511.99	175.89	831.10

	Exchanger 6	Exchanger 7	Exchanger 8	Exchanger 9	Exchanger 10
Duty (kW)	28074	1485	6994	1759	5591
Mt (kg/s)	104.00	13.41	63.18	15.89	50.51
Ms (kg/s)	134.00	12.10	28.50	14.20	38.90
NS	4	2	2	2	2
Ntp	4	2	2	2	2
Ds (m)	1.45	0.49	1.02	0.54	0.94
Nt	2620	674	2900	818	2500
Nb	2	9	3	4	3
do (m)	0.01905	0.01270	0.01270	0.01270	0.01270
di (m)	0.01656	0.01021	0.01021	0.01021	0.01021
Lt (m)	4.59	5.02	2.21	2.70	4.17
vt (m/s)	1.16	0.77	0.84	0.75	0.78
vs (m/s)	0.48	0.39	0.40	0.39	0.31
Pt (m)	0.02381	0.01588	0.01588	0.01588	0.01588
ht ($W/m^2.K$)	1585.1	1251.4	1345.5	1227.5	1266.7
hs ($W/m^2.K$)	954.4	1022.4	1039.6	1018.2	907.3
U ($W/m^2.K$)	537.0	484.4	505.4	479.0	459.4
Ud ($W/m^2.K$)	492.1	447.5	465.4	442.9	426.2
ΔPt (Pa)	67291	12466	8478	7720	11156
ΔPs (Pa)	17440	10956	9602	5952	5695
Pitch layout	Square	Square	Square	Square	Square
Pumping cost ($/year)	10307.02	330.98	893.55	228.78	866.80
Area cost ($/year)	12427.05	2277.26	3342.89	1760.80	4470.49

จุฬาลงกรณ์มหาวิทยาลัย
Chulalongkorn University

Table 4.44 Design variables for each heat exchangers (Exchanger 11) in example 4 (2nd updating)

	Exchanger 11
Area (m^2)	1678.57
Duty (kW)	7018
Mt (kg/s)	143.00
Ms (kg/s)	235.00
NS	2
Ntp	2
Ds (m)	1.45
Nt	2619
Nb	1
do (m)	0.01905
di (m)	0.01656
Lt (m)	5.36
vt (m/s)	0.80
vs (m/s)	0.48
Pt (m)	0.02381
ht ($W/m^2.K$)	1174.9
hs ($W/m^2.K$)	955.4
U ($W/m^2.K$)	472.9
Ud ($W/m^2.K$)	437.7
ΔPt (Pa)	9211
ΔPs (Pa)	5832
Pitch layout	Square
Pumping cost ($/year)	2967.51
Area cost ($/year)	6815.95

จุฬาลงกรณ์มหาวิทยาลัย
Chulalongkorn University

Table 4.45 is the comparison between step 1 calculation and step 2 calculation after 2nd updating which illustrate the conceptual area from step 1 and corrected area from step 2, overall heat transfer coefficient from step 1 and design overall heat transfer coefficient from step 2.

Table 4.45 Comparison of step 1 calculation and step 2 calculation of example 4 (2nd updating)

	Step 1		Step 2	
	Conceptual Area (m^2)	U ($W/m^2.K$)	Corrected Area (m^2)	Ud ($W/m^2.K$)
Heat exchanger 1	116.20	442.8	129.86	464.6
Heat exchanger 2	408.90	545.5	715.43	448.5
Heat exchanger 3	2913.66	489.5	2909.97	490.1
Heat exchanger 4	245.44	426.6	245.63	426.3
Heat exchanger 5	818.36	417.0	822.63	414.8
Heat exchanger 6	2874.96	492.1	2877.32	492.1
Heat exchanger 7	270.78	446.3	270.03	447.5
Heat exchanger 8	510.89	464.6	511.99	465.4
Heat exchanger 9	175.69	443.4	175.89	442.9
Heat exchanger 10	830.07	426.6	831.10	426.2

จุฬาลงกรณ์มหาวิทยาลัย
CHULALONGKORN UNIVERSITY

	Step 1		Step 2	
	Conceptual Area (m^2)	U ($W/m^2.K$)	Corrected Area (m^2)	Ud ($W/m^2.K$)
Heat exchanger 11	1184.24	437.7	1678.57	437.7

Next step, considering the value of the TAC of 1st updating design compared to 2nd updating design, we found that the TAC of 2nd updating design is increasing and greater than 1st updating design. Thus, we select the topology and detailed design of 1st updating to be the best design for minimizing TAC of this example. The comparison of TAC that has corrected area costs and included pumping costs of initial design, 1st updating design and 2nd updating design is shown in Table 4.46.

Table 4.46 The comparison of TAC among updating for example 4

	Initial Topology Design	1st Updating Topology Design	2nd Updating Topology Design
Total annual Cost ($/year)	3,633,563.75	3,620,394.53	3,622,590.54
Utility Cost ($/year)	3,496,972.09	3,496,972.09	3,496,972.09
Area Cost ($/year)	65,050.12	65,234.65	66,531.56
Pumping Cost ($/year)	41,541.54	30,187.79	30,086.89
Fixed Cost ($/year)	30,000.00	28,000.00	29,000.00
Number of exchangers	30	28	29

Finally, we will select the minimum-cost of HENS as shown in Figure 4.6 to be the final topology and come along with the detailed design for each heat exchanger as displayed in Table 4.37, 4.38, and 4.39. In summary, the comparison of this example with other studies is illustrated in the Table 4.47.

Table 4.47 Summary of TAC compared with other studies for example 4

	This study	Kazi (2021a)	Kazi (2021b)	Short (2016)	Mizutani (2003)
Total annual Cost ($/year)	3,620,394.53	3,766,112	3,679,782	4,203,057	5,183,221
Utility Cost ($/year)	3,496,972.09	3,529,527	3,496,972	4,091,975	5,154,291
Area Cost ($/year)	65,234.65	76,620	77,118	42,982	11,123
Pumping Cost ($/year)	30,187.79	113,965	67,692	46,099	4807
Fixed Cost ($/year)	28,000.00	46,000	38,000	22,000	13,000

จุฬาลงกรณ์มหาวิทยาลัย
CHULALONGKORN UNIVERSITY

4.2 The Challenging Case Study

This section illustrates the case study (Wu, 2022) of HENS and detailed design by using mixed-integer non-linear programming (MINLP) and dividing into 2 steps to completely makes the practical HENS that are the stage-wise superstructure model and individual heat exchanger model.

Next, performing the first step calculation of SWS model that using the GAMS re-synthesize the HEN. The diagram of HEN is shown in Figure 4.8 that consists of 20 heat exchangers with 15 hot streams and 11 cold streams. The parameters of first step calculation are shown in Table 4.48 which the overall heat transfer coefficient is equal to that used in the base case. The economic data of design

networks are illustrated in Table 4.49 and validation of HENs are also displayed in Table 4.50.

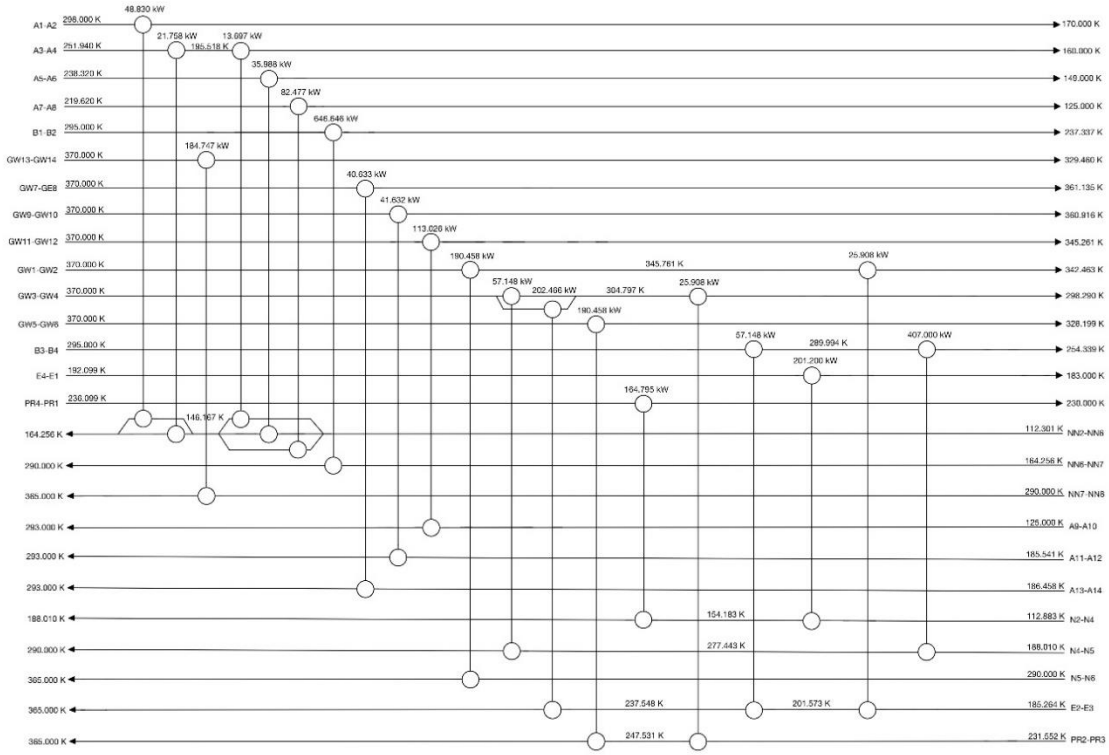

Figure 4.8 Minimum-cost network of HENS from step 1 calculation.

Table 4.48 Parameter data for first step calculation

Parameter	Value (unit)
EMAT	5 (K)
U	0.850 (kW/m^2.K)
NS	1 (-)
Faccost	0.072 (year $^{-1}$)
AC	1397 (\$/m^2)
AE	0.89 (-)

Table 4.49 The economic data of improved design HEN from this study

Unit Name	Type	Specification	Unit	Capital Cost (\$)	Annual Cost (\$/year)
HE1	Heat exchanger	0.899	m^2	1270.70	91.49

Unit Name	Type	Specification	Unit	Capital Cost ($)	Annual Cost ($/year)
HE2	Heat exchanger	0.384	m^2	596.01	42.91
HE3	Heat exchanger	12.957	m^2	13656.06	983.24
HE4	Heat exchanger	0.332	m^2	523.61	37.70
HE5	Heat exchanger	0.703	m^2	1020.91	73.51
HE6	Heat exchanger	2.795	m^2	3487.19	251.08
HE7	Heat exchanger	29.536	m^2	28432.13	2047.11
HE8	Heat exchanger	0.401	m^2	619.43	44.60
HE9	Heat exchanger	0.410	m^2	631.79	45.49
HE10	Heat exchanger	0.975	m^2	1365.87	98.34
HE11	Heat exchanger	10.540	m^2	11363.83	818.20
HE12	Heat exchanger	1.370	m^2	1848.75	133.11
HE13	Heat exchanger	9.816	m^2	10666.41	767.98
HE14	Heat exchanger	8.099	m^2	8988.77	647.19
HE15	Heat exchanger	3.183	m^2	3914.90	281.87
HE16	Heat exchanger	0.493	m^2	744.44	53.60
HE17	Heat exchanger	0.936	m^2	1317.14	94.83
HE18	Heat exchanger	4.519	m^2	5347.91	385.05
HE19	Heat exchanger	0.202	m^2	336.48	24.23
HE20	Heat exchanger	14.787	m^2	15359.95	1105.92
			Total	111492.28	**8027.44**

จุฬาลงกรณ์มหาวิทยาลัย
CHULALONGKORN UNIVERSITY

Table 4.50 Comparison the net duties of this study that are validated by Aspen Plus

Unit Name	Type	This study Net Duty (kW)	Aspen Plus Net Duty (kW)	% Deviation
HE1	Heat exchanger	48.830	48.830	0.00
HE2	Heat exchanger	21.758	21.696	0.29
HE3	Heat exchanger	184.747	184.747	0.00
HE4	Heat exchanger	13.697	13.759	0.45
HE5	Heat exchanger	35.988	35.986	0.01
HE6	Heat exchanger	82.477	82.478	0.00
HE7	Heat exchanger	646.646	646.647	0.00
HE8	Heat exchanger	40.633	40.633	0.00
HE9	Heat exchanger	41.632	41.632	0.00
HE10	Heat exchanger	113.026	113.026	0.00

Unit Name	Type	This study Net Duty (kW)	Aspen Plus Net Duty (kW)	% Deviation
HE11	Heat exchanger	190.458	195.387	2.52
HE12	Heat exchanger	57.148	57.171	0.04
HE13	Heat exchanger	202.466	201.217	0.62
HE14	Heat exchanger	190.458	185.561	2.64
HE15	Heat exchanger	164.795	162.397	1.48
HE16	Heat exchanger	25.908	27.134	4.52
HE17	Heat exchanger	57.148	59.702	4.28
HE18	Heat exchanger	201.200	201.200	0.00
HE19	Heat exchanger	25.908	24.603	5.31
HE20	Heat exchanger	407.000	404.446	0.63

For step 2 calculation, applying the data of the first step design in the next model to obtain the detailed design for heat exchangers individually, the example of design variables is the design overall heat transfer coefficient (Ud) that is corrected from the original overall heat transfer coefficient used in step 1 calculation, pressure drop for shell side and tube side, shell diameter, tube diameter, and tube length. Table 4.51 showed the parameters that are used in this step with their values and units.

Table 4.51 Parameter data for second step calculation

Parameter	Value (unit)
km	15 (W/m.K)
e	0.000002 (m)
AC	1397 ($/m^2)
AE	0.89 (-)
Epon	0.24 ($/kWh)
Epoff	0.06 ($/kWh)
hon	10 (h/day)
hoff	14 (h/day)
Nday	360 (day/year)
Faccost	0.072 (year $^{-1}$)
CTP	0.9 (-)

The additional costs that occur in this step is the pumping cost of heat exchangers will make the trustworthiness to overall economic data of this study. In addition, the area cost will be corrected from the overall heat transfer coefficient in

this step to make the economic data and the design to be more practical. The detailed designs of heat exchangers are shown in Table 4.52, 4.53, 4.54, and 4.55 respectively.

Table 4.52 Design variables for each heat exchanger (Exchanger 1 to 5)

	Exchanger 1	Exchanger 2	Exchanger 3	Exchanger 4	Exchanger 5
Area (m^2)	14.366	3.574	23.023	2.870	4.608
Duty (kW)	48.830	21.758	184.747	13.697	35.988
Mt (kg/s)	0.69	0.31	1.00	0.10	0.27
Ms (kg/s)	0.38	0.38	1.00	0.38	0.38
NS	1	1	1	1	1
Ntp	3	6	3	8	8
Ds (m)	0.31	0.25	0.31	0.15	0.20
Nt	120	78	270	64	113
Nb	3	2	62	2	6
do (m)	0.01905	0.01905	0.01270	0.01270	0.01270
di (m)	0.01656	0.01656	0.01021	0.01021	0.01021
Lt (m)	2.00	0.77	2.14	1.12	1.02
vt (m/s)	0.23	0.32	7.18	0.41	0.60
vs (m/s)	7.59	5.66	0.50	5.06	2.92
Pt (m)	0.02381	0.02381	0.01588	0.01588	0.01588
ht ($W/m^2.K$)	679.3	874.4	891.1	1209.7	1662.8
hs ($W/m^2.K$)	71.2	117.5	5250.4	133.1	201.1
U ($W/m^2.K$)	63.2	100.9	595.7	115.9	172.0
Ud ($W/m^2.K$)	60.9	95.1	481.1	108.3	155.9
ΔPt (Pa)	196	536	11443	1772	3640
ΔPs (Pa)	873	784	53274	747	2307
Pitch layout	Square	Square	Square	Square	Square
Pumping cost ($/year)	265.65	75.93	592.85	58.68	61.77
Area cost ($/year)	1077.84	312.46	1640.05	257.03	391.79

Table 4.53 Design variables for each heat exchanger (Exchanger 6 to 10)

	Exchanger 6	Exchanger 7	Exchanger 8	Exchanger 9	Exchanger 10
Area (m^2)	12.851	45.656	8.750	2.486	1.474
Duty (kW)	82.477	646.646	40.633	41.632	113.026

	Exchanger 6	Exchanger 7	Exchanger 8	Exchanger 9	Exchanger 10
Mt (kg/s)	0.62	1.00	0.38	0.38	0.38
Ms (kg/s)	0.38	5.00	1.00	1.00	1.00
NS	1	1	1	1	1
Ntp	6	10	1	2	6
Ds (m)	0.49	0.39	0.34	0.20	0.10
Nt	660	431	82	29	5
Nb	8	17	23	13	28
do (m)	0.01270	0.01270	0.02540	0.02540	0.03175
di (m)	0.01021	0.01021	0.02291	0.02291	0.02921
Lt (m)	0.49	2.66	1.34	1.07	2.96
vt (m/s)	0.18	1.63	7.34	6.80	2.19
vs (m/s)	0.23	0.71	0.28	0.35	0.50
Pt (m)	0.01588	0.01588	0.03175	0.03175	0.03969
ht ($W/m^2.K$)	624.9	2121.8	45.5	182.9	1473.5
hs ($W/m^2.K$)	368.9	1401.4	2978.1	3323.0	3580.7
U ($W/m^2.K$)	208.6	718.3	40.4	155.0	904.8
Ud ($W/m^2.K$)	185.4	558.0	39.4	141.8	586.4
ΔPt (Pa)	205	20373	230	2103	23982
ΔPs (Pa)	714	22705	3244	1616	2642
Pitch layout	Square	Square	Square	Square	Square
Pumping cost ($/year)	1.39	329.20	53.45	76.20	31.55
Area cost ($/year)	976.04	3016.35	693.30	226.18	142.07

จุฬาลงกรณ์มหาวิทยาลัย
CHULALONGKORN UNIVERSITY

Table 4.54 Design variables for each heat exchanger (Exchanger 11 to 15)

	Exchanger 11	Exchanger 12	Exchanger 13	Exchanger 14	Exchanger 15
Area (m^2)	21.484	2.487	27.631	15.903	3.789
Duty (kW)	190.458	57.148	202.466	190.458	164.795
Mt (kg/s)	1.00	1.00	0.40	0.38	1.00
Ms (kg/s)	1.72	0.19	0.68	1.00	0.38
NS	1	1	1	1	1
Ntp	6	1	10	10	3
Ds (m)	0.49	0.15	0.44	0.31	0.20
Nt	674	16	241	270	114
Nb	13	100	56	32	19
do (m)	0.01270	0.02540	0.01905	0.01270	0.01270

	Exchanger 11	Exchanger 12	Exchanger 13	Exchanger 14	Exchanger 15
di (m)	0.01021	0.02291	0.01656	0.01021	0.01021
Lt (m)	0.80	1.95	1.92	1.48	0.83
vt (m/s)	3.90	4.44	0.32	0.56	1.15
vs (m/s)	0.33	0.35	0.24	0.38	0.77
Pt (m)	0.01588	0.03175	0.02381	0.01588	0.01588
ht ($W/m^2.K$)	753.8	948.9	477.0	798.5	2439.2
hs ($W/m^2.K$)	4313.1	2906.2	2715.5	4509.2	2600.0
U ($W/m^2.K$)	506.5	625.1	348.6	534.2	1013.2
Ud ($W/m^2.K$)	421.2	500.0	305.9	440.2	721.0
ΔPt (Pa)	6971	1774	833	3723	3102
ΔPs (Pa)	8339	9890	11952	16910	7154
Pitch layout	Square	Square	Square	Square	Square
Pumping cost ($/year)	235.98	47.79	11.27	25.33	23.66
Area cost ($/year)	1542.13	226.33	1929.20	1179.88	329.15

Table 4.55 Design variables for each heat exchanger (Exchanger 16 to 20)

	Exchanger 16	Exchanger 17	Exchanger 18	Exchanger 19	Exchanger 20
Area (m^2)	0.587	1.785	4.777	0.213	36.377
Duty (kW)	25.908	57.148	201.200	25.908	407.000
Mt (kg/s)	0.38	0.40	1.00	0.40	1.00
Ms (kg/s)	0.88	5.00	0.40	1.72	5.00
NS	1	1	1	1	1
Ntp	9	10	7	4	10
Ds (m)	0.15	0.25	0.25	0.10	0.54
Nt	29	78	177	13	131
Nb	5	1	20	1	27
do (m)	0.01905	0.01905	0.01270	0.01905	0.03175
di (m)	0.01656	0.01656	0.01021	0.01656	0.02921
Lt (m)	0.34	0.38	0.68	0.27	2.78
vt (m/s)	0.97	0.51	1.30	1.08	0.85
vs (m/s)	0.52	0.90	0.90	0.65	0.77
Pt (m)	0.02381	0.02381	0.01588	0.02381	0.03969
ht ($W/m^2.K$)	1817.1	1180.1	3172.7	2098.9	790.5
hs ($W/m^2.K$)	3664.3	1303.7	3035.3	5050.5	976.7
U ($W/m^2.K$)	1005.1	546.2	1228.7	1197.6	402.1

จุฬาลงกรณ์มหาวิทยาลัย
CHULALONGKORN UNIVERSITY

	Exchanger 16	Exchanger 17	Exchanger 18	Exchanger 19	Exchanger 20
Ud ($W/m^2.K$)	716.9	448.3	823.8	809.7	346.4
ΔPt (Pa)	10613	2737	11761	5380	2678
ΔPs (Pa)	1915	1388	11388	547	18559
Pitch layout	Square	Square	Square	Square	Square
Pumping cost ($/year)	9.40	16.53	59.68	5.36	198.13
Area cost ($/year)	62.58	168.48	404.52	25.35	2464.12

Table 4.56 is the comparison between step 1 calculation and step 2 calculation which show the conceptual area from step 1 and corrected area from step 2, overall heat transfer coefficient from step 1 and design overall heat transfer coefficient from step 2.

Table 4.56 Comparison of step 1 calculation and step 2 calculation

	Step 1		Step 2	
	Conceptual Area (m^2)	U ($W/m^2.K$)	Corrected Area (m^2)	Ud ($W/m^2.K$)
HE1	0.899	850.0	14.366	60.9
HE2	0.384	850.0	3.574	95.1
HE3	12.957	850.0	23.023	481.1
HE4	0.332	850.0	2.870	108.3
HE5	0.703	850.0	4.608	155.9
HE6	2.795	850.0	12.851	185.4
HE7	29.536	850.0	45.656	558.0
HE8	0.401	850.0	8.750	39.4
HE9	0.410	850.0	2.486	141.8
HE10	0.975	850.0	1.474	586.4
HE11	10.540	850.0	21.484	421.2
HE12	1.370	850.0	2.487	500.0
HE13	9.816	850.0	27.631	305.9
HE14	8.099	850.0	15.903	440.2
HE15	3.183	850.0	3.789	721.0
HE16	0.493	850.0	0.587	716.9
HE17	0.936	850.0	1.785	448.3
HE18	4.519	850.0	4.777	823.8
HE19	0.202	850.0	0.213	809.7

	Step 1		Step 2	
	Conceptual Area (m^2)	U ($W/m^2.K$)	Corrected Area (m^2)	Ud ($W/m^2.K$)
HE20	14.787	850.0	36.377	346.4

Next, using variables from step 2 calculation update to step 1 calculation that will get a new topology as shown in Figure 4.9 including twenty heat exchangers. The new economic data after updating the variables from step 2 calculation are illustrated in Table 4.57 and validation of HEN after first updating is also displayed in Table 4.58.

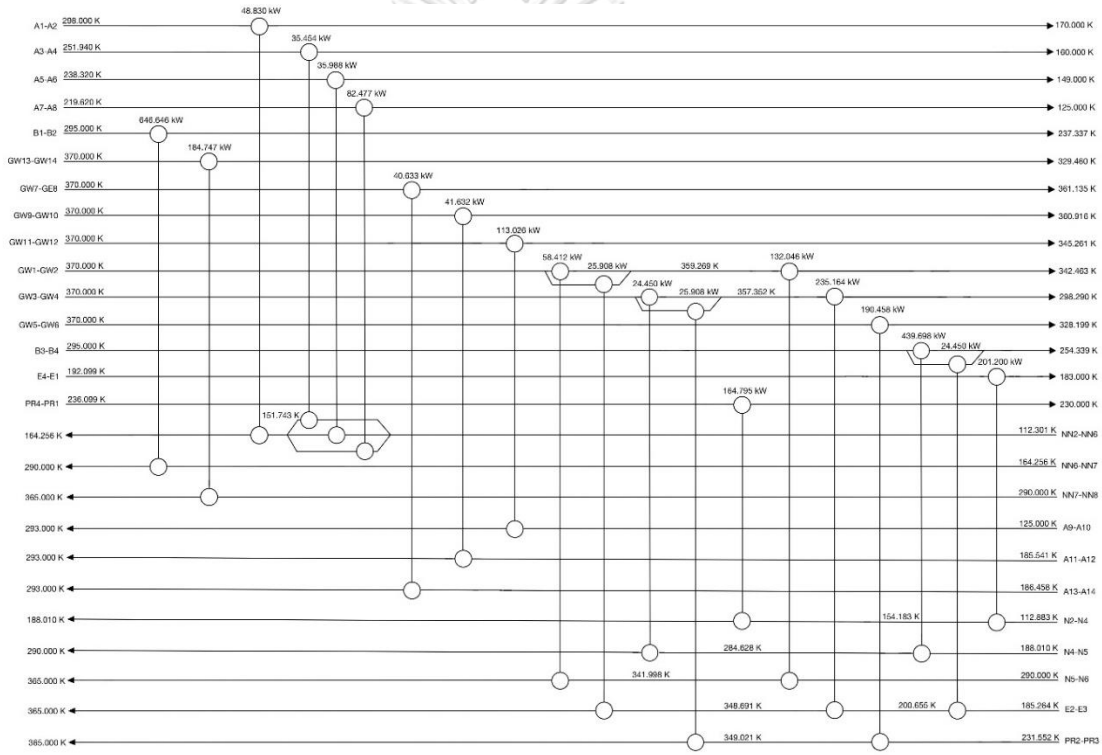

Figure 4.9 Minimum-cost network of HENS after 1st updating.

Table 4.57 The economic data of improved design HEN from this study after 1st updating

Unit Name	Type	Specification	Unit	Capital Cost ($)	Annual Cost ($/year)
HE1	Heat exchanger	44.992	m^2	41351.08	2977.28

Unit Name	Type	Specification	Unit	Capital Cost ($)	Annual Cost ($/year)
HE2	Heat exchanger	22.893	m^2	22663.75	1631.79
HE3	Heat exchanger	13.759	m^2	14405.84	1037.22
HE4	Heat exchanger	4.628	m^2	5462.56	393.30
HE5	Heat exchanger	3.971	m^2	4766.69	343.20
HE6	Heat exchanger	13.480	m^2	14145.57	1018.48
HE7	Heat exchanger	8.647	m^2	9528.11	686.02
HE8	Heat exchanger	2.456	m^2	3108.13	223.79
HE9	Heat exchanger	1.413	m^2	1900.30	136.82
HE10	Heat exchanger	13.998	m^2	14628.34	1053.24
HE11	Heat exchanger	4.298	m^2	5114.50	368.24
HE12	Heat exchanger	0.641	m^2	940.37	67.71
HE13	Heat exchanger	5.539	m^2	6409.89	461.51
HE14	Heat exchanger	3.753	m^2	4533.08	326.38
HE15	Heat exchanger	9.893	m^2	10740.84	773.34
HE16	Heat exchanger	20.720	m^2	20738.78	1493.19
HE17	Heat exchanger	8.719	m^2	9598.69	691.11
HE18	Heat exchanger	41.934	m^2	38840.11	2796.49
HE19	Heat exchanger	0.673	m^2	982.04	70.71
HE20	Heat exchanger	4.663	m^2	5499.32	395.95
			Total	235358.00	**16945.78**

จุฬาลงกรณ์มหาวิทยาลัย
CHULALONGKORN UNIVERSITY

Table 4.58 Comparison the net duties of this study that are validated by Aspen Plus after 1st updating

Unit Name	Type	This study Net Duty (kW)	Aspen Plus Net Duty (kW)	% Deviation
HE1	Heat exchanger	646.646	646.647	0.00
HE2	Heat exchanger	184.747	184.747	0.00
HE3	Heat exchanger	48.830	48.830	0.00
HE4	Heat exchanger	35.454	35.455	0.00
HE5	Heat exchanger	35.988	35.986	0.01
HE6	Heat exchanger	82.477	82.478	0.00
HE7	Heat exchanger	40.633	40.633	0.00
HE8	Heat exchanger	41.632	41.632	0.00
HE9	Heat exchanger	113.026	113.026	0.00

Unit Name	Type	This study Net Duty (kW)	Aspen Plus Net Duty (kW)	% Deviation
HE10	Heat exchanger	58.412	58.987	0.97
HE11	Heat exchanger	25.908	26.108	0.76
HE12	Heat exchanger	24.450	24.646	0.80
HE13	Heat exchanger	25.908	25.906	0.01
HE14	Heat exchanger	164.795	164.795	0.00
HE15	Heat exchanger	132.046	131.271	0.59
HE16	Heat exchanger	235.164	234.967	0.08
HE17	Heat exchanger	190.458	190.459	0.00
HE18	Heat exchanger	439.698	439.701	0.00
HE19	Heat exchanger	24.450	24.446	0.02
HE20	Heat exchanger	201.200	201.200	0.00

After 1st updating, step 2 calculation requires to re-synthesize the detail design model for individual heat exchangers again and the detailed designs for twenty process heat exchangers in Figure 4.9 with their pumping costs and corrected area costs are shown in Table 4.59, 4.60, 4.61, and 4.62.

Table 4.59 Design variables for each heat exchanger after 1st updating (Exchanger 1 to 5)

	Exchanger 1	Exchanger 2	Exchanger 3	Exchanger 4	Exchanger 5
Area (m^2)	45.656	23.023	16.647	5.010	6.789
Duty (kW)	646.646	184.747	48.830	35.454	35.988
Mt (kg/s)	1.00	1.00	1.00	0.23	0.23
Ms (kg/s)	5.00	1.00	0.38	0.38	0.38
NS	1	1	1	1	1
Ntp	10	3	2	10	10
Ds (m)	0.39	0.31	0.31	0.31	0.39
Nt	431	270	120	270	430
Nb	17	62	3	2	3
do (m)	0.01270	0.01270	0.01905	0.01270	0.01270
di (m)	0.01021	0.01021	0.01656	0.01021	0.01021
Lt (m)	2.66	2.14	2.32	0.47	0.396
vt (m/s)	1.63	7.18	0.23	0.27	0.17
vs (m/s)	0.71	0.50	6.55	6.63	2.21
Pt (m)	0.01588	0.01588	0.02381	0.01588	0.01588

	Exchanger 1	Exchanger 2	Exchanger 3	Exchanger 4	Exchanger 5
ht ($W/m^2.K$)	2121.8	891.1	664.0	865.3	603.4
hs ($W/m^2.K$)	1401.4	5250.4	65.7	154.7	172.5
U ($W/m^2.K$)	718.3	595.7	58.7	125.1	125.8
Ud ($W/m^2.K$)	558.0	481.1	56.7	116.4	116.9
ΔPt (Pa)	20373	11443	131	750	302
ΔPs (Pa)	22705	53274	669	2347	1552
Pitch layout	Square	Square	Square	Square	Square
Pumping cost ($/year)	329.20	592.85	208.58	183.90	32.12
Area cost ($/year)	3016.35	1640.05	1228.90	422.10	553.13

Table 4.60 Design variables for each heat exchanger after 1st updating (Exchanger 6 to 10)

	Exchanger 6	Exchanger 7	Exchanger 8	Exchanger 9	Exchanger 10
Area (m^2)	6.363	8.750	2.486	1.474	11.929
Duty (kW)	82.477	40.633	41.632	113.026	58.412
Mt (kg/s)	0.54	0.38	0.38	0.38	1.00
Ms (kg/s)	0.38	1.00	1.00	1.00	1.19
NS	1	1	1	1	1
Ntp	10	1	2	6	3
Ds (m)	0.31	0.34	0.20	0.10	0.31
Nt	270	82	29	5	270
Nb	34	23	13	28	23
do (m)	0.01270	0.02540	0.02540	0.03175	0.01270
di (m)	0.01021	0.02291	0.02291	0.02921	0.01021
Lt (m)	0.59	1.34	1.07	2.96	1.11
vt (m/s)	0.63	7.34	6.80	2.19	5.51
vs (m/s)	1.14	0.28	0.35	0.50	0.45
Pt (m)	0.01588	0.03175	0.03175	0.03969	0.01588
ht ($W/m^2.K$)	1700.1	45.5	182.9	1473.5	929.7
hs ($W/m^2.K$)	896.4	2978.1	3323.0	3580.7	5223.0
U ($W/m^2.K$)	515.6	40.4	155.0	904.8	616.6
Ud ($W/m^2.K$)	393.8	39.4	141.8	586.4	494.6
ΔPt (Pa)	4097	230	2103	23982	6731
ΔPs (Pa)	32974	3244	1616	2642	15498
Pitch layout	Square	Square	Square	Square	Square

จุฬาลงกรณ์มหาวิทยาลัย
CHULALONGKORN UNIVERSITY

	Exchanger 6	Exchanger 7	Exchanger 8	Exchanger 9	Exchanger 10
Pumping cost ($/year)	52.69	53.45	76.20	31.55	261.42
Area cost ($/year)	522.14	693.30	226.18	142.07	913.50

Table 4.61 Design variables for each heat exchanger after 1st updating (Exchanger 11 to 15)

	Exchanger 11	Exchanger 12	Exchanger 13	Exchanger 14	Exchanger 15
Area (m^2)	5.883	0.790	10.793	3.789	10.236
Duty (kW)	25.908	24.450	25.908	164.795	132.046
Mt (kg/s)	0.40	1.00	0.38	1.00	1.00
Ms (kg/s)	0.53	0.43	0.45	0.38	1.72
NS	1	1	1	1	1
Ntp	9	1	10	3	3
Ds (m)	0.25	0.20	0.39	0.20	0.25
Nt	78	52	190	114	44
Nb	48	8	60	19	37
do (m)	0.01905	0.01905	0.01905	0.01270	0.02540
di (m)	0.01656	0.01656	0.01656	0.01021	0.02291
Lt (m)	1.26	0.25	0.95	0.83	2.92
vt (m/s)	3.18	2.75	1.11	1.15	5.78
vs (m/s)	0.44	0.40	0.40	0.77	0.48
Pt (m)	0.02381	0.02381	0.02381	0.01588	0.03175
ht ($W/m^2.K$)	1186.2	666.7	580.1	2439.2	881.5
hs ($W/m^2.K$)	4320.8	4054.6	4065.9	2600.0	3802.6
U ($W/m^2.K$)	775.1	485.2	431.4	1013.2	621.9
Ud ($W/m^2.K$)	591.7	406.3	367.9	721.0	498.0
ΔPt (Pa)	15832	524	2618	3102	8456
ΔPs (Pa)	15379	1903	24880	7154	10077
Pitch layout	Square	Square	Square	Square	Square
Pumping cost ($/year)	93.46	15.14	24.73	23.66	279.33
Area cost ($/year)	486.91	81.56	835.65	329.15	797.14

จุฬาลงกรณ์มหาวิทยาลัย
CHULALONGKORN UNIVERSITY

Table 4.62 Design variables for each heat exchanger after 1st updating (Exchanger 16 to 20)

	Exchanger 16	Exchanger 17	Exchanger 18	Exchanger 19	Exchanger 20
Area (m^2)	15.848	8.971	26.503	1.171	4.777
Duty (kW)	235.164	190.458	439.698	24.450	201.200
Mt (kg/s)	0.40	0.38	1.00	0.40	1.00
Ms (kg/s)	0.88	1.00	4.74	0.26	0.40
NS	1	1	1	1	1
Ntp	10	10	7	6	7
Ds (m)	0.34	0.31	0.34	0.25	0.25
Nt	145	270	330	78	177
Nb	54	18	13	5	20
do (m)	0.01905	0.01270	0.01270	0.01905	0.01270
di (m)	0.01656	0.01021	0.01021	0.01656	0.01021
Lt (m)	1.83	0.83	2.01	0.25	0.68
vt (m/s)	0.44	0.51	1.96	0.27	1.30
vs (m/s)	0.40	0.39	0.80	0.21	0.90
Pt (m)	0.02381	0.01588	0.01588	0.02381	0.01588
ht ($W/m^2.K$)	677.5	767.1	1888.7	692.7	3172.7
hs ($W/m^2.K$)	3466.0	4560.0	1499.8	598.3	3035.3
U ($W/m^2.K$)	481.9	517.2	705.4	292.3	1228.7
Ud ($W/m^2.K$)	404.0	428.6	550.1	261.7	823.8
ΔPt (Pa)	1870	2719	13333	517	11761
ΔPs (Pa)	23092	10098	18523	317	11388
Pitch layout	Square	Square	Square	Square	Square
Pumping cost ($/year)	26.93	15.46	264.51	0.61	59.68
Area cost ($/year)	1176.27	708.88	1858.91	115.79	404.52

Table 4.63 is the comparison between step 1 calculation and step 2 calculation after 1st updating which illustrate the conceptual area from step 1 and corrected area from step 2, overall heat transfer coefficient from step 1 and design overall heat transfer coefficient from step 2.

จุฬาลงกรณ์มหาวิทยาลัย
CHULALONGKORN UNIVERSITY

Table 4.63 Comparison of step 1 calculation and step 2 calculation after 1st updating

	Step 1		Step 2	
	Conceptual Area (m^2)	U ($W/m^2.K$)	Corrected Area (m^2)	Ud ($W/m^2.K$)
HE1	44.992	558.0	45.656	558.0
HE2	22.893	481.1	23.023	481.1
HE3	13.759	60.9	16.647	56.7
HE4	4.628	108.3	5.010	116.4
HE5	3.971	155.9	6.789	116.9
HE6	13.480	185.4	6.363	393.8
HE7	8.647	39.4	8.750	39.4
HE8	2.456	141.8	2.486	141.8
HE9	1.413	586.4	1.474	586.4
HE10	13.998	421.2	11.929	494.6
HE11	4.298	809.7	5.883	591.7
HE12	0.641	500.0	0.790	406.3
HE13	5.539	716.9	10.793	367.9
HE14	3.753	721.0	3.789	721.0
HE15	9.893	421.2	10.236	498.0
HE16	20.720	305.9	15.848	404.0
HE17	8.719	440.2	8.971	428.6
HE18	41.934	346.4	26.503	550.1
HE19	0.673	448.3	1.171	261.7
HE20	4.663	823.8	4.777	823.8

When comparing the TAC from the 1st updating design with the initial improved design, the TAC of 1st updating design is less than the initial design, so we must do the 2nd updating to confirm the minimum total annual cost design. Using variables from step 2 calculation of 1st updating input to step 1 calculation of new iteration again then topology including twenty heat exchangers is shown in Figure 4.10. The new economic data after updating the variables are illustrated in Table 4.64 and validation of design networks after second updating are also displayed in Table 4.65.

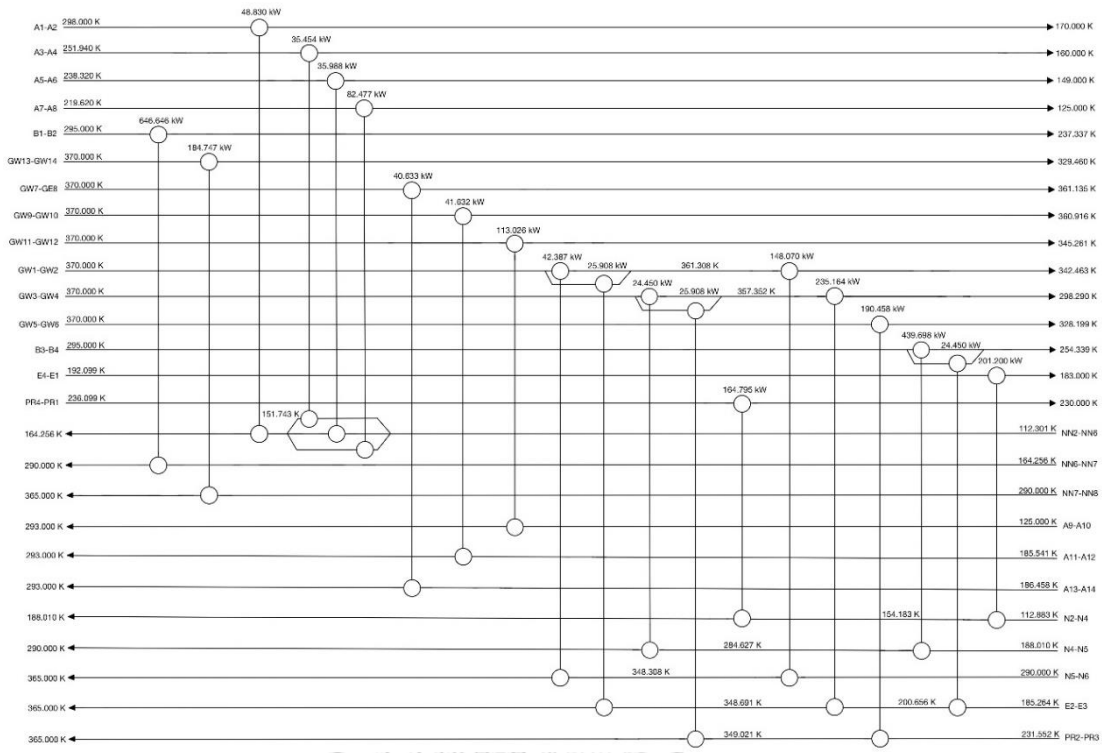

Figure 4.10 Minimum-cost network of HENS after 2nd updating.

Table 4.64 The economic data of improved design network from this study after 2nd updating

Unit Name	Type	Specification	Unit	Capital Cost ($)	Annual Cost ($/year)
HE1	Heat exchanger	44.992	m^2	41351.08	2977.28
HE2	Heat exchanger	22.893	m^2	22663.75	1631.79
HE3	Heat exchanger	14.778	m^2	15351.62	1105.32
HE4	Heat exchanger	4.306	m^2	5122.98	368.85
HE5	Heat exchanger	5.296	m^2	6159.00	443.45
HE6	Heat exchanger	6.346	m^2	7234.72	520.90
HE7	Heat exchanger	8.647	m^2	9528.11	686.02
HE8	Heat exchanger	2.456	m^2	3108.13	223.79
HE9	Heat exchanger	1.413	m^2	1900.30	136.82
HE10	Heat exchanger	10.233	m^2	11068.76	796.95
HE11	Heat exchanger	5.319	m^2	6182.80	445.16
HE12	Heat exchanger	0.789	m^2	1131.34	81.46

Unit Name	Type	Specification	Unit	Capital Cost ($)	Annual Cost ($/year)
HE13	Heat exchanger	10.793	m^2	11606.28	835.65
HE14	Heat exchanger	3.753	m^2	4533.08	326.38
HE15	Heat exchanger	10.499	m^2	11324.47	815.36
HE16	Heat exchanger	15.689	m^2	16191.09	1165.76
HE17	Heat exchanger	8.955	m^2	9829.58	707.73
HE18	Heat exchanger	26.406	m^2	25734.26	1852.87
HE19	Heat exchanger	1.153	m^2	1585.71	114.17
HE20	Heat exchanger	4.663	m^2	5499.32	395.95
			Total	217106.39	**15631.66**

Table 4.65 Comparison the net duties of this study that are validated by Aspen Plus after 2nd updating

Unit Name	Type	This study Net Duty (kW)	Aspen Plus Net Duty (kW)	% Deviation
HE1	Heat exchanger	646.646	646.647	0.00
HE2	Heat exchanger	184.747	184.747	0.00
HE3	Heat exchanger	48.830	48.830	0.00
HE4	Heat exchanger	35.454	35.455	0.00
HE5	Heat exchanger	35.988	35.986	0.01
HE6	Heat exchanger	82.477	82.478	0.00
HE7	Heat exchanger	40.633	40.633	0.00
HE8	Heat exchanger	41.632	41.632	0.00
HE9	Heat exchanger	113.026	113.026	0.00
HE10	Heat exchanger	42.387	42.894	1.18
HE11	Heat exchanger	25.908	26.108	0.76
HE12	Heat exchanger	24.450	24.646	0.80
HE13	Heat exchanger	25.908	25.906	0.01
HE14	Heat exchanger	164.795	164.795	0.00
HE15	Heat exchanger	148.070	147.364	0.48
HE16	Heat exchanger	235.164	234.967	0.08
HE17	Heat exchanger	190.458	190.459	0.00
HE18	Heat exchanger	439.698	439.701	0.00
HE19	Heat exchanger	24.450	24.446	0.02
HE20	Heat exchanger	201.200	201.200	0.00

จุฬาลงกรณ์มหาวิทยาลัย
Chulalongkorn University

After that, step 2 calculation requires to re-synthesize the detailed design model for individual heat exchangers again and the detailed designs for twenty process heat exchangers in Figure 4.10 with their pumping costs and corrected area costs are shown in Table 4.66, 4.67, 4.68, and 4.69.

Table 4.66 Design variables for each heat exchanger after 2nd updating (Exchanger 1 to 5)

	Exchanger 1	Exchanger 2	Exchanger 3	Exchanger 4	Exchanger 5
Area (m^2)	45.656	23.023	16.647	5.010	6.789
Duty (kW)	646.646	184.747	48.830	35.454	35.988
Mt (kg/s)	1.00	1.00	1.00	0.23	0.23
Ms (kg/s)	5.00	1.00	0.38	0.38	0.38
NS	1	1	1	1	1
Ntp	10	3	2	10	10
Ds (m)	0.39	0.31	0.31	0.31	0.39
Nt	431	270	120	270	430
Nb	17	62	3	2	3
do (m)	0.01270	0.01270	0.01905	0.01270	0.01270
di (m)	0.01021	0.01021	0.01656	0.01021	0.01021
Lt (m)	2.66	2.14	2.32	0.47	0.396
vt (m/s)	1.63	7.18	0.23	0.27	0.17
vs (m/s)	0.71	0.50	6.55	6.63	2.21
Pt (m)	0.01588	0.01588	0.02381	0.01588	0.01588
ht ($W/m^2.K$)	2121.8	891.1	664.0	865.3	603.4
hs ($W/m^2.K$)	1401.4	5250.4	65.7	154.7	172.5
U ($W/m^2.K$)	718.3	595.7	58.7	125.1	125.8
Ud ($W/m^2.K$)	558.0	481.1	56.7	116.4	116.9
ΔPt (Pa)	20373	11443	131	750	302
ΔPs (Pa)	22705	53274	669	2347	1552
Pitch layout	Square	Square	Square	Square	Square
Pumping cost ($/year)	329.20	592.85	208.58	183.90	32.12
Area cost ($/year)	3016.35	1640.05	1228.90	422.10	553.13

จุฬาลงกรณ์มหาวิทยาลัย
CHULALONGKORN UNIVERSITY

Table 4.67 Design variables for each heat exchanger after 2nd updating (Exchanger 6 to 10)

	Exchanger 6	Exchanger 7	Exchanger 8	Exchanger 9	Exchanger 10
Area (m^2)	6.363	8.750	2.486	1.474	11.399
Duty (kW)	82.477	40.633	41.632	113.026	42.387
Mt (kg/s)	0.54	0.38	0.38	0.38	1.00
Ms (kg/s)	0.38	1.00	1.00	1.00	1.07
NS	1	1	1	1	1
Ntp	10	1	2	6	3
Ds (m)	0.31	0.34	0.20	0.10	0.34
Nt	270	82	29	5	325
Nb	34	23	13	28	18
do (m)	0.01270	0.02540	0.02540	0.03175	0.01270
di (m)	0.01021	0.02291	0.02291	0.02921	0.01021
Lt (m)	0.59	1.34	1.07	2.96	0.88
vt (m/s)	0.63	7.34	6.80	2.19	4.63
vs (m/s)	1.14	0.28	0.35	0.50	0.37
Pt (m)	0.01588	0.03175	0.03175	0.03969	0.01588
ht ($W/m^2.K$)	1700.1	45.5	182.9	1473.5	804.9
hs ($W/m^2.K$)	896.4	2978.1	3323.0	3580.7	4679.3
U ($W/m^2.K$)	515.6	40.4	155.0	904.8	540.1
Ud ($W/m^2.K$)	393.8	39.4	141.8	586.4	444.1
ΔPt (Pa)	4097	230	2103	23982	4418
ΔPs (Pa)	32974	3244	1616	2642	9277
Pitch layout	Square	Square	Square	Square	Square
Pumping cost ($/year)	52.69	53.45	76.20	31.55	170.59
Area cost ($/year)	522.14	693.30	226.18	142.07	877.31

Table 4.68 Design variables for each heat exchanger after 2nd updating (Exchanger 11 to 15)

	Exchanger 11	Exchanger 12	Exchanger 13	Exchanger 14	Exchanger 15
Area (m^2)	5.356	0.790	10.793	3.789	19.456
Duty (kW)	25.908	24.450	25.908	164.795	148.070
Mt (kg/s)	0.40	1.00	0.38	1.00	1.00

	Exchanger 11	Exchanger 12	Exchanger 13	Exchanger 14	Exchanger 15
Ms (kg/s)	0.65	0.43	0.45	0.38	1.72
NS	1	1	1	1	1
Ntp	9	1	10	3	7
Ds (m)	0.25	0.20	0.39	0.20	0.44
Nt	78	52	190	114	136
Nb	32	8	60	19	30
do (m)	0.01905	0.01905	0.01905	0.01270	0.02540
di (m)	0.01656	0.01656	0.01656	0.01021	0.02291
Lt (m)	1.15	0.25	0.95	0.83	1.79
vt (m/s)	3.18	2.75	1.11	1.15	4.40
vs (m/s)	0.41	0.40	0.40	0.77	0.36
Pt (m)	0.02381	0.02381	0.02381	0.01588	0.03175
ht ($W/m^2.K$)	1186.2	666.7	580.1	2439.2	707.4
hs ($W/m^2.K$)	4122.7	4054.6	4065.9	2600.0	3265.5
U ($W/m^2.K$)	768.5	485.2	431.4	1013.2	510.0
Ud ($W/m^2.K$)	587.8	406.3	367.9	721.0	423.6
ΔPt (Pa)	15512	524	2618	3102	10046
ΔPs (Pa)	8777	1903	24880	7154	8674
Pitch layout	Square	Square	Square	Square	Square
Pumping cost ($/year)	88.77	15.14	24.73	23.66	327.83
Area cost ($/year)	447.93	81.56	835.65	329.15	1411.87

Table 4.69 Design variables for each heat exchanger after 2nd updating (Exchanger 16 to 20)

CHULALONGKORN UNIVERSITY

	Exchanger 16	Exchanger 17	Exchanger 18	Exchanger 19	Exchanger 20
Area (m^2)	15.848	8.971	26.503	1.171	4.777
Duty (kW)	235.164	190.458	439.698	24.450	201.200
Mt (kg/s)	0.40	0.38	1.00	0.40	1.00
Ms (kg/s)	0.88	1.00	4.74	0.26	0.40
NS	1	1	1	1	1
Ntp	10	10	7	6	7
Ds (m)	0.34	0.31	0.34	0.25	0.25
Nt	145	270	330	78	177
Nb	54	18	13	5	20
do (m)	0.01905	0.01270	0.01270	0.01905	0.01270

	Exchanger 16	Exchanger 17	Exchanger 18	Exchanger 19	Exchanger 20
di (m)	0.01656	0.01021	0.01021	0.01656	0.01021
Lt (m)	1.83	0.83	2.01	0.25	0.68
vt (m/s)	0.44	0.51	1.96	0.27	1.30
vs (m/s)	0.40	0.39	0.80	0.21	0.90
Pt (m)	0.02381	0.01588	0.01588	0.02381	0.01588
ht ($W/m^2.K$)	677.5	767.1	1888.7	692.7	3172.7
hs ($W/m^2.K$)	3466.0	4560.0	1499.8	598.3	3035.3
U ($W/m^2.K$)	481.9	517.2	705.4	292.3	1228.7
Ud ($W/m^2.K$)	404.0	428.6	550.1	261.7	823.8
ΔPt (Pa)	1870	2719	13333	517	11761
ΔPs (Pa)	23092	10098	18523	317	11388
Pitch layout	Square	Square	Square	Square	Square
Pumping cost ($/year)	26.93	15.46	264.51	0.61	59.68
Area cost ($/year)	1176.27	708.88	1858.91	115.79	404.52

Table 4.70 is the comparison between step 1 calculation and step 2 calculation after 2nd updating which illustrate the conceptual area from step 1 and corrected area from step 2, overall heat transfer coefficient from step 1 and design overall heat transfer coefficient from step 2.

Table 4.70 Comparison of step 1 calculation and step 2 calculation after 2nd updating

	Step 1		Step 2	
	Conceptual Area (m^2)	U ($W/m^2.K$)	Corrected Area (m^2)	Ud ($W/m^2.K$)
HE1	44.992	558.0	45.656	558.0
HE2	22.893	481.1	23.023	481.1
HE3	14.778	56.7	16.647	56.7
HE4	4.306	116.4	5.010	116.4
HE5	5.296	116.9	6.789	116.9
HE6	6.346	393.8	6.363	393.8
HE7	8.647	39.4	8.750	39.4
HE8	2.456	141.8	2.486	141.8
HE9	1.413	586.4	1.474	586.4
HE10	10.233	494.6	11.399	444.1
HE11	5.319	591.7	5.356	587.8

	Step 1		Step 2	
	Conceptual Area (m^2)	U ($W/m^2.K$)	Corrected Area (m^2)	Ud ($W/m^2.K$)
HE12	0.789	406.3	0.790	406.3
HE13	10.793	367.9	10.793	367.9
HE14	3.753	721.0	3.789	721.0
HE15	10.499	498.0	19.456	423.6
HE16	15.689	404.0	15.848	404.0
HE17	8.955	428.6	8.971	428.6
HE18	26.406	550.1	26.503	550.1
HE19	1.153	261.7	1.171	261.7
HE20	4.663	823.8	4.777	823.8

Next step, considering the value of the TAC of 1st updating design compared to 2nd updating design, we found that the TAC of 2nd updating design is increasing and greater than 1st updating design. Thus, we select the topology and detailed design of 1st updating to be the best design for minimizing TAC of this study as the methodology in flowchart. The comparison of TAC that has corrected area costs and included pumping costs of initial improved design, 1st updating design and 2nd updating design is shown in Table 4.71.

Table 4.71 The comparison of TAC among improved HEN of the base case

	The Base Case Design	Initial Improved Design	**1st Updating Design**	2nd Updating Design
Total Annual Costs ($/year)	20,054.92	19,244.66	**18,777.96**	19,270.50
Area Costs ($/year)	17,569.17	17,064.86	**16,152.51**	16,692.07
Pumping Costs ($/year)	2,485.75	2,179.81	**2,625.45**	2,578.43
Number of Exchangers	15	20	**20**	20

To summarize, the example 1, 2 and 3 of general case studies have different hot streams and cold streams only and the rest of parameters in the first step design are almost the same, so the main factor is total numbers of streams that are used in each example. It seems like higher numbers of streams possess more space to

optimization as example 3, but this example is difficult to get the results that minimize the TAC in the first step calculation (stage-wise superstructure model). So, the good initializations and range of boundaries are required for restriction the undesired solutions. For instance, the costs from hot utilities are the most expansive in the HENS of this general case studies, then designer of the HENS should determine the upper bound of a variable which represents the hot utility load. However, the exchanger minimum approach temperature (EMAT) of example 4 is higher than example 3 and this factor reduces the possibility of stream matching for example 4. So, the total annual costs of example 4 must be higher than example 3 because of fewer opportunities to design the HENS.

In the second step designs of general case studies, there are no differences in the detailed designs for individual heat exchangers except a numbers of heat exchangers for each example because all properties of the fluids that are implemented in these four examples have a constant value without regarding to the temperature or conditions, hot streams and cold streams also have the same properties. The main variable that impacts on area costs is design overall heat transfer coefficient (Ud) and the velocity of fluid flow is the main variable which effects to pressure drop and pumping costs.

The challenging case is the real process of LNG cold energy transfer and numbers of hot streams and cold streams are the highest compared to previous case studies, so this is the most difficult case in this study. The special features of this case are no hot utilities and cold utilities, but there is less room for optimization. Therefore, it requires a lot of initialization and boundary of variables and additional constraints to help the program find the solutions. For example, we have a reference of heat duties from the base case and pairs of stream matching, then putting this information as constraints in the GAMS model will assist the program to discover solutions more easily. This is a challenge compared with general case studies that can adjust the hot utilities and cold utilities freely under the constraint equations. However, the TAC of this challenging case study will not decrease significantly because of minimization of the area costs of heat exchangers only.

The challenging case study has types of streams in the process greater than general case studies that is LNG, ethane, propane, n-butane, air, and geothermal

จุฬาลงกรณ์มหาวิทยาลัย
Chulalongkorn University

water. In 2nd step design, the properties of fluids change with the temperature, pressure, and phase, so this is a more realistic and difficult case than four previous cases that it needs to find the exact value of properties for inlet and outlet streams of the individual heat exchanger to perform the detailed design of variables. The maximum mass flow rate in this case study equals to 1 kilogram per second; therefore, the pumping costs for each heat exchanger will have small value. On the other hand, the corrected area costs are highly different from conceptual area costs because the initial overall heat transfer coefficient (U) that are used in 1st step design have a large value, but the design overall heat transfer coefficient (Ud) have a small value especially for vapor phase streams. Finally, we obtain guideline designs of each case studies to create the new HEN that can conserve the energy, save the environment, and save the economy.

จุฬาลงกรณ์มหาวิทยาลัย
CHULALONGKORN UNIVERSITY

CHAPTER 5
CONCLUSIONS AND RECOMMENDATIONS

5.1 Conclusions

This work has developed the two-step designs for HENS with updating step to study the five case studies from publications. In step one model, the MINLP mathematical programming of SWS model was used to design the overall HEN topology. This step reports economic results of the utility cost, area cost, and fixed cost for first four case studies, but reports only area cost for the last case; challenging case study. Then, detailed design model for the individual heat exchanger will solve for specific variables for heat exchangers such as fluid velocities, heat transfer coefficient, and number of tubes using the results of step-one model. The real area cost and pumping cost were calculated in this step-two model, so area cost will be corrected, and pumping cost will be added to HEN that fulfils the economic data completely. Moreover, the developed HEN can be used to confirm the economic data, topology, and the detailed design for heat exchangers by updating step. Next, the final result of TAC from each case study was compared with publications, and we found that the HEN from our two-step design can overcome them by minimizing the cost in step-one model as low as possible and manage the trade-off among the cost in step two model literally.

จุฬาลงกรณ์มหาวิทยาลัย
Chulalongkorn University

As a result, the two-step designs can generate the HEN and its detailed design of individual heat exchanger to recover energy from waste heat in hot steams to heat cold streams. Then, the waste heat will be recovered to save the environment and ecology and reduce the global warming problem that follows sustainable development approach and the trend of energy conservation. In addition, the two-step design model helps synthesize the minimum TAC HEN for improving the economy of an industrial process.

5.2 Recommendations

To fulfil this work, the other types of heat exchanger can be considered to design the details. Even though they are minority in using as heat exchanger, some specific process has reasons to not use shell and tube heat exchangers. Therefore, the alternative model of the step two can be developed to solve this problem. However, the equations in step two model will be changed that some types of heat exchanger do not have research of their detailed design extensively, so this is maybe difficult to do this case. Besides, the assumption of no heat loss is neglected, and we can consider about natural convection, heat radiation, or etc. to make the heat transfer analysis more perfectly. On the other hand, if we find the case study that contains a lot of economic parameters, we can bring that case to do our two-step designs. The various of economic parameters will make the economic data more reliable.

จุฬาลงกรณ์มหาวิทยาลัย
CHULALONGKORN UNIVERSITY

APPENDICES

GRAPHICAL ABSTRACT

Appendix A

The grid diagram of heat exchanger network

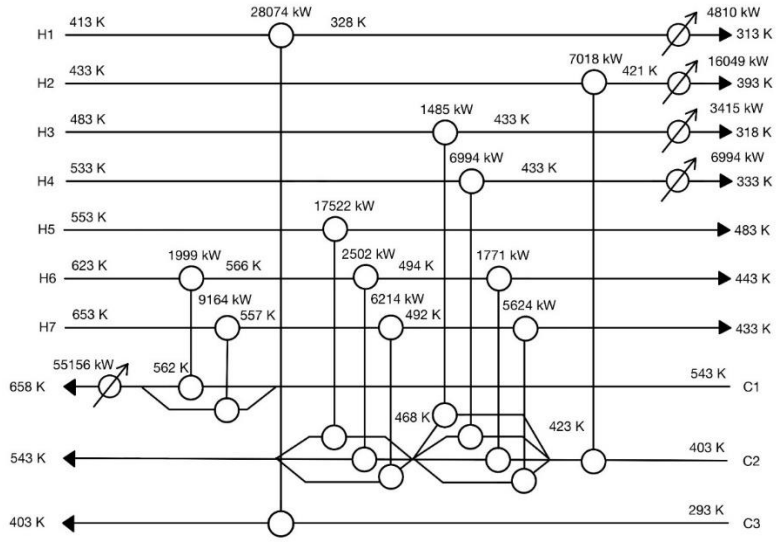

Trade-off between pumping cost and area cost

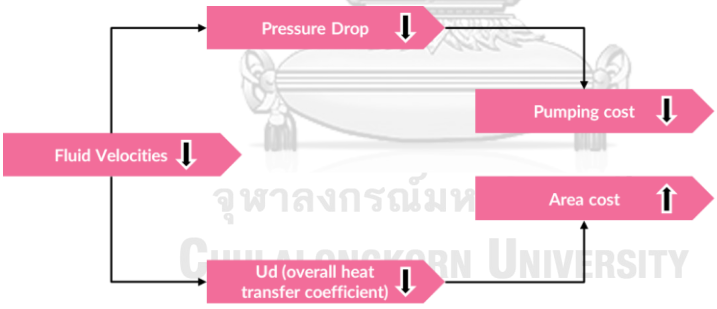

- To minimize TAC of HEN in case studies
- To design the details for heat exchangers

EMAT (Exchanger minimum approach temperature)

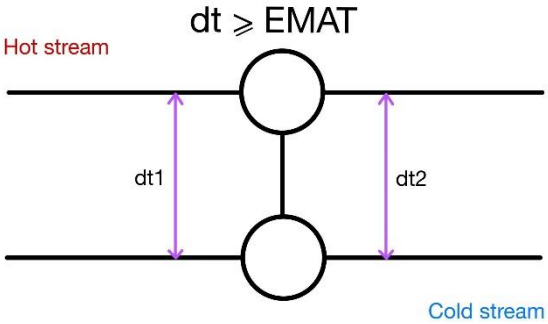

Appendix B Lists of Equations for All Case Studies

Step-1 model: SWS models for general case studies (Example 1-4)

Nomenclature

Indexes

I	Hot streams
J	Cold streams
K	The stages

Parameters

CUcost	Cold utility cost ($/kW)
HUcost	Hot utility cost ($/kW)
Fcost	Fixed cost ($)
AC	Area cost coefficient ($/m^2)
AE	Area cost exponent
NS	Number of shell
Tin_I	Supply temperature of hot stream I (K)
Tin_J	Supply temperature of cold stream J (K)
$Tout_I$	Target temperature of hot stream I (K)
$Tout_J$	Target temperature of cold stream J (K)
Thuin	Inlet temperature of hot utility (K)
Thuout	Outlet temperature of hot utility (K)
Tcuin	Inlet temperature of cold utility (K)
Tcuout	Outlet temperature of cold utility (K)
U	Overall heat transfer coefficient (W/m^2.K)
Cp	Specific heat capacity (kJ/kg.K)
ρ	Density of fluid (kg/m^3)
M_I	Mass flow rate for hot streams (kg/s)
M_J	Mass flow rate for cold streams (kg/s)
EMAT	Exchanger minimum approach temperature (K)

จุฬาลงกรณ์มหาวิทยาลัย
Chulalongkorn University

Ω_I	Upper bound for heat exchanged of hot stream (kW)
Ω_J	Upper bound for heat exchanged of cold stream (kW)
$\Gamma_{I,J}$	Upper bound for temperature difference (K)

Variables

$TCost$	Total annual cost ($)
$q_{I,J,K}$	Heat exchange between hot and cold streams (kW)
qcu_I	Heat exchange between cold utilities and hot streams (kW)
qhu_J	Heat exchange between hot utilities and cold streams (kW)
$t_{I,K}$	Intermediate temperature of hot stream I at stage K (K)
$t_{J,K}$	Intermediate temperature of cold stream J at stage K (K)
$dt_{I,J,K}$	Approach temperature for stream matching (K)
$dtcu_I$	Approach temperature between cold utility and hot stream (K)
$dthu_J$	Approach temperature between hot utility and cold stream (K)
$LMTD_{I,J,K}$	Logarithm mean temperature difference (K)
$LMTDcu_I$	Logarithm mean temperature difference of cold utilities (K)
$LMTDhu_J$	Logarithm mean temperature difference of hot utilities (K)
$A_{I,J,K}$	Area of heat exchangers (m^2)
Acu_I	Area of cold utilities (m^2)
Ahu_J	Area of hot utilities (m^2)

จุฬาลงกรณ์มหาวิทยาลัย
CHULALONGKORN UNIVERSITY

Binary variables

$z_{I,J,K}$	Binary variables represent exchanger matching
zcu_I	Binary variables represent cold utility matching
zhu_J	Binary variables represent hot utility matching

Topology Design Equations

$$Tcost = CUcost \cdot \sum_I qcu_I + HUcost \cdot \sum_J qhu_J$$

$$+Fcost \cdot \left(\sum_I \sum_J \sum_K z_{I,J,K} \cdot NS + \sum_I zcu_I + \sum_J zhu_J \right)$$

$$+\sum_{I}\sum_{J}\sum_{K} NS \cdot AC \cdot \left(\frac{A_{I,J,K}}{NS}\right)^{AE} + \sum_{I} AC \cdot Acu_I^{AE} + \sum_{J} AC \cdot Ahu_J^{AE} \qquad (Eq.1)$$

$$M_I \cdot Cp \cdot (Tin_I - Tout_I) = \sum_{J}\sum_{K} q_{I,J,K} + qcu_I \qquad (Eq.2)$$

$$M_J \cdot Cp \cdot (Tout_J - Tin_J) = \sum_{I}\sum_{K} q_{I,J,K} + qhu_J \qquad (Eq.3)$$

$$M_I \cdot Cp \cdot (t_{I,K} - t_{I,K+1}) = \sum_{J} q_{I,J,K} \qquad (Eq.4)$$

$$M_J \cdot Cp \cdot (t_{J,K} - t_{J,K+1}) = \sum_{I} q_{I,J,K} \qquad (Eq.5)$$

$$Tin_I = t_{I,1} \qquad (Eq.6)$$

$$Tin_J = t_{J,NOK+1} \qquad (Eq.7)$$

$$t_{I,K} \geq t_{I,K+1} \qquad (Eq.8)$$

$$t_{J,K} \geq t_{J,K+1} \qquad (Eq.9)$$

$$Tout_I \leq t_{I,NOK+1} \qquad (Eq.10)$$

$$Tout_J \geq t_{J,1} \qquad (Eq.11)$$

$$M_I \cdot Cp \cdot (t_{I,NOK+1} - Tout_I) = qcu_I \qquad (Eq.12)$$

$$M_J \cdot Cp \cdot (Tout_J - t_{J,1}) = qhu_J \qquad (Eq.13)$$

$$q_{I,J,K} - min[\Omega_I, \Omega_J] \cdot z_{I,J,K} \leq 0 \qquad (Eq.14)$$

$$qcu_I - \Omega_I \cdot zcu_I \leq 0 \qquad (Eq.15)$$

$$qhu_J - \Omega_J \cdot zhu_J \leq 0 \qquad (Eq.16)$$

$$dt_{I,J,K} \leq (t_{I,K} - t_{J,K}) + \Gamma_{I,J} \cdot (1 - z_{I,J,K}) \qquad (Eq.17)$$

$$dt_{I,J,K+1} \leq (t_{I,K+1} - t_{J,K+1}) + \Gamma_{I,J} \cdot (1 - z_{I,J,K}) \qquad (Eq.18)$$

$$dtcu_I \leq (t_{I,NOK+1} - Tcuout) \qquad (Eq.19)$$

$$dthu_J \leq (Thuout - t_{J,1}) \qquad (Eq.20)$$

$$dt_{I,J,K} \geq EMAT \qquad (Eq.21)$$

$$LMTD_{I,J,K} = \frac{2}{3}(dt_{I,J,K} \cdot dt_{I,J,K+1})^{0.5} + \frac{1}{3}\left(\frac{dt_{I,J,K} + dt_{I,J,K+1}}{2}\right) \qquad (Eq.22)$$

$$LMTDcu_I = \frac{2}{3}(dtcu_I \cdot (Tout_I - Tcuin))^{0.5} + \frac{1}{3}\left(\frac{dtcu_I + (Tout_I - Tcuin)}{2}\right) \qquad (Eq.23)$$

จุฬาลงกรณ์มหาวิทยาลัย
Chulalongkorn University

$$LMTDhu_J = \frac{2}{3}\left(dthu_J \cdot \left(Thuin - Tout_J\right)\right)^{0.5} + \frac{1}{3}\left(\frac{dthu_J + \left(Thuin - Tout_J\right)}{2}\right) \quad (Eq.24)$$

$$A_{I,J,K} = \frac{q_{I,J,K}}{U \cdot LMTD_{I,J,K}} \quad (Eq.25)$$

$$Acu_I = \frac{qcu_I}{U \cdot LMTDcu_I} \quad (Eq.26)$$

$$Ahu_J = \frac{qhu_J}{U \cdot LMTDhu_J} \quad (Eq.27)$$

$$\Omega_I = M_I \cdot Cp \cdot (Tin_I - Tout_I) \quad (Eq.28)$$

$$\Omega_J = M_J \cdot Cp \cdot \left(Tout_J - Tin_J\right) \quad (Eq.29)$$

$$\Gamma_{I,J} = max\left[Tin_I - Tin_J, Tout_I - Tin_J, Tin_I - Tout_J, Tout_J - Tout_I\right] \quad (Eq.30)$$

Step-2 model: Individual Heat Exchanger Detailed Designs for general case studies

Nomenclature

Parameters

Tint	Inlet temperature for tube side (K)
Tins	Inlet temperature for shell side (K)
Toutt	Outlet temperature for tube side (K)
Touts	Outlet temperature for shell side (K)
mt	Mass flow rate for tube side (kg/s)
ms	Mass flow rate for shell side (kg/s)
Cp	Specific heat capacity (J/kg.K)
ρ	Density of fluid (kg/m^3)
μ	Viscosity of fluid (kg/m.s)
kf	Thermal conductivity of fluid (W/m.K)
km	Thermal conductivity of material (W/m.K)
e	Roughness of pipe (m)
Pr	Prandtl number
AC	Area cost coefficient ($/m^2)

AE	Area cost exponent
PC	Pumping cost coefficient
CTP	Tube count constant
Rd	Dirt resistance
R	First parameter for correction factor
S	Second parameter for correction factor
P	Third parameter for correction factor
W	Fourth parameter for correction factor
FT	Correction factor for LMTD
Q	Heat exchange (W)
dT1	Temperature difference for first side of exchanger (K)
dT2	Temperature difference for second side of exchanger (K)
LMTD	Log-mean temperature difference (K)

Variables

cost	Total cost ($)
Pcost	Pumping cost ($)
Acost	Area cost ($)
U	Overall heat transfer coefficient ($W/m^2.K$)
Ud	Design overall heat transfer coefficient ($W/m^2.K$)
Din	Inner diameter of tube (m)
Dout	Outer diameter of tube (m)
Pt	Tube pitch (m)
Ds	Shell's diameter (m)
De	Equivalent diameter (m)
Lt	Tube length per shell (m)
Vi	Inside velocity (m/s)
Vo	Outside velocity (m/s)
Lb	Baffle spacing (m)
Ao	Cross section area outside tube (m^2)
REi	Inside Reynolds number
REo	Outside Reynolds number

จุฬาลงกรณ์มหาวิทยาลัย
Chulalongkorn University

Nui	Inside Nusselt number
Nuo	Outside Nusselt number
hi	Inside convective heat transfer coefficient (W/m^2.K)
ho	Outside convective heat transfer coefficient (W/m^2.K)
Asi	Surface area of tube inside per shell (m^2)
Aso	Surface area of tube outside per shell (m^2)
Fft	Friction factor for tube
Ffs	Friction factor for shell
dPt	Pressure drop for tube side (Pa)
dPs	Pressure drop for shell side (Pa)

Integer variables

Ns	Number of shell-passes
Nt	Number of tubes per shell
Nb	Number of baffles per shell
Ntp	Number of tube-passes per shell

Detailed Design Equations

$$cost = Pcost + Acost \qquad (Eq.31)$$

$$Pcost = PC \cdot \left(dPt\frac{mt}{\rho} + dPs\frac{ms}{\rho}\right) \qquad (Eq.32)$$

$$Acost = AC \cdot Ns \cdot (Aso)^{AE} \qquad (Eq.33)$$

$$Q = ms \cdot Cp \cdot (Tins - Touts) = mt \cdot Cp \cdot (Toutt - Tint) \qquad (Eq.34)$$

$$dT1 = Touts - Tint \qquad (Eq.35)$$

$$dT2 = Tins - Toutt \qquad (Eq.36)$$

$$LMTD = \frac{(dT1 - dT2)}{ln\left(\frac{dT1}{dT2}\right)} \qquad (Eq.37)$$

$$R = \frac{(Tins - Touts)}{(Toutt - Tint)} \qquad (Eq.38)$$

$$S = \frac{(Toutt - Tint)}{(Tins - Tint)} \qquad (Eq.39)$$

$$P = \sqrt{(R^2 + 1)} \qquad (Eq.40)$$

$$W = R + 1 \qquad (Eq.41)$$

$$FT = \frac{P \cdot ln\,(1 - S)/(1 - R \cdot S)}{(R - 1)\,ln\dfrac{2 - S \cdot (W - P)}{2 - S \cdot (W + P)}} \qquad (Eq.42)$$

$$Pr = \frac{\mu \cdot Cp}{kf} \qquad (Eq.43)$$

$$Aso = \frac{Q}{(Ns \cdot U \cdot FT \cdot LMTD)} \qquad (Eq.44)$$

$$Nt = CTP \cdot \frac{\pi}{4} \cdot \frac{Ds^2}{Pt^2} \qquad (Eq.45)$$

$$Vi = \frac{(mt/\rho)}{\left(\dfrac{\pi \cdot Din^2}{4}\right) \cdot \left(\dfrac{Nt}{Ntp}\right)} \qquad (Eq.46)$$

$$Asi = \pi \cdot Din \cdot Lt \cdot Nt \qquad (Eq.47)$$

$$Aso = \pi \cdot Dout \cdot Lt \cdot Nt \qquad (Eq.48)$$

$$Lb = \frac{Lt}{(Nb + 1)} \qquad (Eq.49)$$

$$Ao = \frac{(Pt - Dout) \cdot Ds \cdot Lb}{Pt} \qquad (Eq.50)$$

$$Vo = \frac{(ms/\rho)}{Ao} \qquad (Eq.51)$$

$$De = \frac{4(Pt^2 - \pi \cdot Dout^2/4)}{\pi \cdot Dout} \qquad (Eq.52)$$

$$REi = \frac{\rho \cdot Vi \cdot Din}{\mu} \qquad (Eq.53)$$

$$REo = \frac{\rho \cdot Vo \cdot De}{\mu} \qquad (Eq.54)$$

$$\frac{hi \cdot Din}{kf} = 0.023 \cdot REi^{0.8} \cdot Pr^{0.33} \qquad (Eq.55)$$

$$\frac{ho \cdot De}{kf} = 0.36 \cdot REi^{0.55} \cdot Pr^{0.33} \qquad (Eq.56)$$

$$\frac{1}{U \cdot Aso} = \frac{1}{hi \cdot Asi} + \frac{ln(Dout/Din)}{2 \cdot \pi \cdot km \cdot Lt \cdot Nt} + \frac{1}{ho \cdot Aso} \qquad (Eq.57)$$

$$\frac{1}{Ud} = \frac{1}{U} + Rd \qquad (Eq.58)$$

จุฬาลงกรณ์มหาวิทยาลัย
Chulalongkorn University

$$\frac{1}{\sqrt{Fft}} = -3.6 \cdot log_{10}\left[\left(\frac{6.9}{REi}\right) + \left(\frac{e}{3.7 \cdot Din}\right)^{1.11}\right] \qquad (Eq.59)$$

$$Ffs = exp(0.576 - 0.19 \cdot ln(REo)) \qquad (Eq.60)$$

$$dPt = 2 \cdot \left(\frac{Fft \cdot Lt}{Din} + 1\right) \cdot Ntp \cdot Ns \cdot \rho \cdot Vi^2 \qquad (Eq.61)$$

$$dPs = \frac{Ffs}{2} \cdot \frac{Ds}{De} \cdot (Nb + 1) \cdot Ns \cdot \rho \cdot Vo^2 \qquad (Eq.62)$$

Note: all equations which are used in these cases are brought from these references that are Sieder and Tate (1936), Moody (1944), Kern (1950), Filonenko (1954), Kays and London (1964), Gnielinski (1976), Kays and London (1984), Bejan (1993), Mason (1995), Smith (1997), Janna (1998), Kakac and Liu (1998), Rohsennow (1998), Mills (1999), Kuppan (2000), Hesselgreaves (2001), Incropera (2007), and Çengel and Ghajar (2015).

จุฬาลงกรณ์มหาวิทยาลัย
CHULALONGKORN UNIVERSITY

Step-1 model: SWS model for conceptual design topology for the challenging case study

Nomenclature

Indexes

I	Hot streams
J	Cold streams
K	The stages

Parameters

$Faccost$	Factor to change capital cost to annual cost (year $^{-1}$)
AC	Area cost coefficient ($/m^2)
AE	Area cost exponent
NS	Number of shell
Tin_I	Supply temperature of hot stream I (K)
Tin_J	Supply temperature of cold stream J (K)
$Tout_I$	Target temperature of hot stream I (K)
$Tout_J$	Target temperature of cold stream J (K)
U	Overall heat transfer coefficient (kW/m^2.K)
Cph_I	Specific heat capacity of hot stream I (kJ/kg.K)
Cpc_J	Specific heat capacity of cold stream J (kJ/kg.K)
M_I	Mass flow rate for hot streams (kg/s)
M_J	Mass flow rate for cold streams (kg/s)
$EMAT$	Exchanger minimum approach temperature (K)
Ω_I	Upper bound for heat exchanged of hot stream (kW)
Ω_J	Upper bound for heat exchanged of cold stream (kW)
$\Gamma_{I,J}$	Upper bound for temperature difference (K)

Variables

$TCost$	Total annual cost ($/year)
$q_{I,J,K}$	Heat exchange between hot and cold streams (kW)

$t_{I,K}$	Intermediate temperature of hot stream I at stage K (K)
$t_{J,K}$	Intermediate temperature of cold stream J at stage K (K)
$dt_{I,J,K}$	Approach temperature for stream matching (K)
$LMTD_{I,J,K}$	Logarithm mean temperature difference (K)
$A_{I,J,K}$	Area of heat exchangers (m^2)

Binary variables

$z_{I,J,K}$	Binary variables represent exchanger matching

Topology Design Equations

$$TCost = Faccost \cdot \left[\sum_I \sum_J \sum_K NS \cdot AC \cdot \left(\frac{A_{I,J,K}}{NS}\right)^{AE}\right] \quad (Eq.63)$$

$$M_I \cdot Cp \cdot (Tin_I - Tout_I) = \sum_J \sum_K q_{I,J,K} \quad (Eq.64)$$

$$M_J \cdot Cp \cdot (Tout_J - Tin_J) = \sum_I \sum_K q_{I,J,K} \quad (Eq.65)$$

$$M_I \cdot Cp \cdot (t_{I,K} - t_{I,K+1}) = \sum_J q_{I,J,K} \quad (Eq.66)$$

$$M_J \cdot Cp \cdot (t_{J,K} - t_{J,K+1}) = \sum_I q_{I,J,K} \quad (Eq.67)$$

$$Tin_I = t_{I,1} \quad (Eq.68)$$

$$Tin_J = t_{J,NOK+1} \quad (Eq.69)$$

$$t_{I,K} \geq t_{I,K+1} \quad (Eq.70)$$

$$t_{J,K} \geq t_{J,K+1} \quad (Eq.71)$$

$$Tout_I = t_{I,NOK+1} \quad (Eq.72)$$

$$Tout_J = t_{J,1} \quad (Eq.73)$$

$$q_{I,J,K} - min[\Omega_I, \Omega_J] \cdot z_{I,J,K} \leq 0 \quad (Eq.74)$$

จุฬาลงกรณ์มหาวิทยาลัย
Chulalongkorn University

$$dt_{I,J,K} \leq \left(t_{I,K} - t_{J,K}\right) + \Gamma_{I,J} \cdot \left(1 - z_{I,J,K}\right) \qquad (Eq.75)$$

$$dt_{I,J,K+1} \leq \left(t_{I,K+1} - t_{J,K+1}\right) + \Gamma_{I,J} \cdot \left(1 - z_{I,J,K}\right) \qquad (Eq.76)$$

$$dt_{I,J,K} \geq EMAT \qquad (Eq.77)$$

$$LMTD_{I,J,K} = \frac{2}{3}\left(dt_{I,J,K} \cdot dt_{I,J,K+1}\right)^{0.5} + \frac{1}{3}\left(\frac{dt_{I,J,K} + dt_{I,J,K+1}}{2}\right) \qquad (Eq.78)$$

$$A_{I,J,K} = \frac{q_{I,J,K}}{U \cdot LMTD_{I,J,K}} \qquad (Eq.79)$$

$$\Omega_I = M_I \cdot Cp \cdot (Tin_I - Tout_I) \qquad (Eq.80)$$

$$\Omega_J = M_J \cdot Cp \cdot \left(Tout_J - Tin_J\right) \qquad (Eq.81)$$

$$\Gamma_{I,J} = max\left[Tin_I - Tin_J, Tout_I - Tin_J, Tin_I - Tout_J, Tout_J - Tout_I\right] \qquad (Eq.82)$$

Step-2 model: Individual Heat Exchanger Designs for the challenging case study

Nomenclature

Parameters

Tint	Inlet temperature for tube side (K)
Tins	Inlet temperature for shell side (K)
Toutt	Outlet temperature for tube side (K)
Touts	Outlet temperature for shell side (K)
mt	Mass flow rate of tube side (kg/s)
ms	Mass flow rate of shell side (kg/s)
Cpt	Specific heat capacity of tube side (J/kg.K)
Cps	Specific heat capacity of shell side (J/kg.K)
ρt	Density of fluid of tube side (kg/m^3)
ρs	Density of fluid of shell side (kg/m^3)
μt	Viscosity of fluid of tube side (kg/m.s)
μs	Viscosity of fluid of shell side (kg/m.s)
kft	Thermal conductivity of tube side fluid (W/m.K)

จุฬาลงกรณ์มหาวิทยาลัย
CHULALONGKORN UNIVERSITY

kfs	Thermal conductivity of shell side fluid (W/m.K)
Rdt	Dirt resistance of tube side (m^2.K/W)
Rds	Dirt resistance of shell side (m^2.K/W)
km	Thermal conductivity of material (W/m.K)
e	Roughness of pipe (m)
Prt	Prandtl number for tube side
Prs	Prandtl number for shell side
AC	Area cost coefficient ($/$m^2$)
AE	Area cost exponent
Epon	Electricity price over on-peak time ($/kWh)
Epoff	Electricity price over off-peak time ($/kWh)
hon	Operating hours per day for on-peak time (h/day)
hoff	Operating hours per day for off-peak time (h/day)
Nday	Operating days per year (day/year)
Faccost	Factor to change capital cost to annual cost (year $^{-1}$)
CTP	Tube count constant
R	First parameter for correction factor
S	Second parameter for correction factor
P	Third parameter for correction factor
W	Fourth parameter for correction factor
FT	Correction factor for LMTD
Q	Heat exchange (W)
dT1	Temperature difference for first side of exchanger (K)
dT2	Temperature difference for second side of exchanger (K)
LMTD	Log-mean temperature difference (K)

Variables

cost	Total cost ($)
Pcost	Pumping cost ($)
Acost	Area cost ($)
U	Overall heat transfer coefficient (W/m^2.K)
Ud	Design overall heat transfer coefficient (W/m^2.K)

จุฬาลงกรณ์มหาวิทยาลัย
CHULALONGKORN UNIVERSITY

Din	Inner diameter of tube (m)
Dout	Outer diameter of tube (m)
Pt	Tube pitch (m)
Ds	Shell's diameter (m)
De	Equivalent diameter (m)
Lt	Tube length per shell (m)
Vi	Inside velocity (m/s)
Vo	Outside velocity (m/s)
Lb	Baffle spacing (m)
Ao	Cross section area outside tube (m^2)
REi	Inside Reynolds number
REo	Outside Reynolds number
Nui	Inside Nusselt number
Nuo	Outside Nusselt number
hi	Inside convective heat transfer coefficient ($W/m^2.K$)
ho	Outside convective heat transfer coefficient ($W/m^2.K$)
Asi	Surface area of tube inside per shell (m^2)
Aso	Surface area of tube outside per shell (m^2)
Fft	Friction factor for tube
Ffs	Friction factor for shell
dPt	Pressure drop for tube side (Pa)
dPs	Pressure drop for shell side (Pa)

จุฬาลงกรณ์มหาวิทยาลัย
CHULALONGKORN UNIVERSITY

Integer variables

Ns	Number of shell-passes
Nt	Number of tubes per shell
Nb	Number of baffles per shell
Ntp	Number of tube-passes per shell

Detailed Design Equations

$$cost = Pcost + Acost \quad (Eq.83)$$

$$Pcost = \left(\frac{Eon \cdot hon \cdot Nday}{1000} + \frac{Eoff \cdot hoff \cdot Nday}{1000}\right) \cdot \left(dPt\frac{mt}{\rho t} + dPs\frac{ms}{\rho s}\right) \quad (Eq.84)$$

$$Acost = Faccost \cdot AC \cdot Ns \cdot (Aso)^{AE} \quad (Eq.85)$$

$$Q = ms \cdot Cps \cdot (Tins - Touts) = mt \cdot Cpt \cdot (Toutt - Tint) \quad (Eq.86)$$

$$dT1 = Touts - Tint \quad (Eq.87)$$

$$dT2 = Tins - Toutt \quad (Eq.88)$$

$$LMTD = \frac{(dT1 - dT2)}{ln\left(\frac{dT1}{dT2}\right)} \quad (Eq.89)$$

$$R = \frac{(Tins - Touts)}{(Toutt - Tint)} \quad (Eq.90)$$

$$S = \frac{(Toutt - Tint)}{(Tins - Tint)} \quad (Eq.91)$$

$$P = \sqrt{(R^2 + 1)} \quad (Eq.92)$$

$$W = R + 1 \quad (Eq.93)$$

$$FT = \frac{P \cdot ln\,(1 - S)/(1 - R \cdot S)}{(R - 1)\,ln\frac{2 - S \cdot (W - P)}{2 - S \cdot (W + P)}} \quad (Eq.94)$$

$$Prt = \frac{\mu t \cdot Cpt}{kft} \quad (Eq.95)$$

$$Prs = \frac{\mu s \cdot Cps}{kfs} \quad (Eq.96)$$

$$Aso = \frac{Q}{(Ns \cdot U \cdot FT \cdot LMTD)} \quad (Eq.97)$$

$$Nt = CTP \cdot \frac{\pi}{4} \cdot \frac{Ds^2}{Pt^2} \quad (Eq.98)$$

$$Vi = \frac{(mt/\rho t)}{\left(\frac{\pi \cdot Din^2}{4}\right) \cdot \left(\frac{Nt}{Ntp}\right)} \quad (Eq.99)$$

$$Asi = \pi \cdot Din \cdot Lt \cdot Nt \quad (Eq.100)$$

$$Aso = \pi \cdot Dout \cdot Lt \cdot Nt \quad (Eq.101)$$

$$Lb = \frac{Lt}{(Nb + 1)} \quad (Eq.102)$$

จุฬาลงกรณ์มหาวิทยาลัย
CHULALONGKORN UNIVERSITY

$$Ao = \frac{(Pt - Dout) \cdot Ds \cdot Lb}{Pt} \quad (Eq.103)$$

$$Vo = \frac{(ms/\rho s)}{Ao} \quad (Eq.104)$$

$$De = \frac{4(Pt^2 - \pi \cdot Dout^2/4)}{\pi \cdot Dout} \quad (Eq.105)$$

$$REi = \frac{\rho t \cdot Vi \cdot Din}{\mu t} \quad (Eq.106)$$

$$REo = \frac{\rho s \cdot Vo \cdot De}{\mu s} \quad (Eq.107)$$

$$\frac{hi \cdot Din}{kft} = 0.023 \cdot REi^{0.8} \cdot Prt^{0.33} \quad (Eq.108)$$

$$\frac{ho \cdot De}{kfs} = 0.36 \cdot REi^{0.55} \cdot Prs^{0.33} \quad (Eq.109)$$

$$\frac{1}{U \cdot Aso} = \frac{1}{hi \cdot Asi} + \frac{ln(Dout/Din)}{2 \cdot \pi \cdot km \cdot Lt \cdot Nt} + \frac{1}{ho \cdot Aso} \quad (Eq.110)$$

$$\frac{1}{Ud} = \frac{1}{U} + Rdt + Rds \quad (Eq.111)$$

$$\frac{1}{\sqrt{Fft}} = -3.6 \cdot log_{10}\left[\left(\frac{6.9}{REi}\right) + \left(\frac{e}{3.7 \cdot Din}\right)^{1.11}\right] \quad (Eq.112)$$

$$Ffs = exp(0.576 - 0.19 \cdot ln(REo)) \quad (Eq.113)$$

$$dPt = 2 \cdot \left(\frac{Fft \cdot Lt}{Din} + 1\right) \cdot Ntp \cdot Ns \cdot \rho t \cdot Vi^2 \quad (Eq.114)$$

$$dPs = \frac{Ffs}{2} \cdot \frac{Ds}{De} \cdot (Nb + 1) \cdot Ns \cdot \rho s \cdot Vo^2 \quad (Eq.115)$$

Note: all equations which are used in this case are brought from these references that are Sieder and Tate (1936), Moody (1944), Kern (1950), Filonenko (1954), Kays and London (1964), Gnielinski (1976), Kays and London (1984), Bejan (1993), Mason (1995), Smith (1997), Janna (1998), Kakac and Liu (1998), Rohsennow (1998), Mills (1999), Kuppan (2000), Hesselgreaves (2001), Incropera (2007), Çengel and Ghajar (2015), and Li (2019).

REFERENCES

Bejan, A. (1993). Heat Transfer. New York: John Wiley & Sons, Inc.

Çengel, Y.A., and Ghajar, A.J. (2015). Heat and Mass Transfer: Fundamentals and Applications (5th ed.). Singapore: McGraw-Hill.

Chang, C., Liao, Z., Costa, A.L.H., and Bagajewicz, M.J. (2022). Globally optimal design of intensified shell and tube heat exchangers using complete set trimming. Computers & Chemical Engineering, 158, 107644.

Chen, J.J.J. (1987). Comments on improvements on a replacement for the logarithmic mean. Chemical Engineering Science, 42(10), 2488-2489.

Filonenko, G.K. (1954). Hydraulic resistance in pipes (in Russia). Teplonergetika (Heat and Power Engineering), 1/4, 40-44.

Frausto-Hernández, S., Rico-Ramírez, V., Jiménez-Gutiérrez, A., and Hernández-Castro, S. (2003). MINLP synthesis of heat exchanger networks considering pressure drop effects. Computers & Chemical Engineering, 27(8), 1143-1152.

Gnielinski, V. (1976). New equation for heat and mass transfer in turbulent pipe and channel flow. International Journal of Chemical Engineering, 16, 359-368.

Gonçalves, C.d.O., Costa, A.L.H., and Bagajewicz, M.J. (2017). Alternative mixed-integer linear programming formulations for shell and tube heat exchanger optimal design. Industrial & Engineering Chemistry Research, 56(20), 5970-5979.

Hesselgreaves, J.E. (2001). Compact Heat Exchangers. London: Pergamon.

Huang, K.F., Al-mutairi, E.M., and Karimi, I.A. (2012). Heat exchanger network synthesis using a stagewise superstructure with non-isothermal mixing. Chemical Engineering Science, 73, 30-43.

Incropera, F.P., Dewitt, D.P., Bergman, T.L., and Lavine, A.S. (2007). Fundamentals of Heat and Mass Transfer (6th ed.). New York: John Wiley & Sons, Inc.

Isafiade, A.J., and Short, M. (2019). Synthesis of renewable energy integrated combined heat and mass exchange networks. Process Integration and Optimization for Sustainability, 3(4), 437-453.

Janna, W.S. (1998). Design of Fluid Thermal Systems (2nd ed.). Boston, MA: PWS Publishing Co.

Kakac, S., and Liu, H. (1998). Heat Exchangers. New York: CRC Press.

Kays, W.M., and London, A.L. (1964). Compact Heat Exchangers (2nd ed.). New York: McGraw-Hill.

Kays, W.M., and London, A.L. (1984). Compact Heat exchangers (3rd ed.). New York: McGraw-Hill.

Kazi, S.R., Short, M., and Biegler, L.T. (2021a). A trust region framework for heat exchanger network synthesis with detailed individual heat exchanger designs. Computers & Chemical Engineering, 153, 107447.

Kazi, S.R., Short, M., Isafiade, A.J., and Biegler, L.T. (2021b). Heat exchanger network synthesis with detailed exchanger designs—2. hybrid optimization strategy for synthesis of heat exchanger networks. AIChE Journal, 67(1), e17057.

Kern, D.Q. (1950). Process Heat Transfer (International Student ed.). New York: McGraw-Hill.

Kuppan, T. (2000). Heat Exchanger Design Handbook. New York: Marcel Dekker, Inc.

Li, C., Zheng, S., Li, J., and Zeng, Z. (2019). Optimal design and thermo-economic analysis of an integrated power generation system in natural gas pressure reduction stations. Energy Conversion and Management, 200, 112079.

Linnhoff, B., and Hindmarsh, E. (1983). The pinch design method for heat exchanger networks. Chemical Engineering Science, 38(5), 745-763.

Mason, J. (1995). Heat transfer in cross flow. Proceedings of the Second U.S. National Congress of Applied Mechani, 1, 801-803.

Mills, A.F. (1999). Heat Transfer (2nd ed.). New Jersey: Prentice Hall.

Mizutani, F.T., Pessoa, F.L.P., Queiroz, E.M., Hauan, S., and Grossmann, I.E. (2003). Mathematical programming model for heat-exchanger network synthesis including detailed heat-exchanger designs. 1. shell-and-tube heat-exchanger design. Industrial and Engineering Chemistry Research, 42(17), 4009-4018.

Moody, L.F. (1944). Friction factors for pipe flow. Transactions of the American Society of Mechanical Engineers, 66, 671-684.

Pan, M., Jamaliniya, S., Smith, R., Bulatov, I., Gough, M., Higley, T., and Droegemueller, P. (2013). New insights to implement heat transfer intensification for shell and tube heat exchangers. Energy, 57, 208-221.

จุฬาลงกรณ์มหาวิทยาลัย
CHULALONGKORN UNIVERSITY

Pavão, L.V., Costa, C.B.B., and Ravagnani, M.A.S.S. (2018). A new stage-wise superstructure for heat exchanger network synthesis considering substages, sub-splits and cross flows. Applied Thermal Engineering, 143, 719-735.

Ravagnani, M.A.S.S., and Caballero, J.A. (2007). Optimal heat exchanger network synthesis with the detailed heat transfer equipment design. Computers & Chemical Engineering, 31(11), 1432-1448.

Rohsennow, W.M., Hartnett, J.P., and Cho, Y.I. (1998). Handbook of Heat Transfer (3rd ed.). New York: McGraw-Hill.

Rosenthal, R.E. (2013). GAMS- A User's Guide. Washington, DC, USA: GAMS Development Corporation.

Short, M., and Isafiade, A.J. (2021). Thirty years of mass exchanger network synthesis – a systematic review. Journal of Cleaner Production, 304, 127112.

Short, M., Isafiade, A.J., Fraser, D.M., and Kravanja, Z. (2016). Synthesis of heat exchanger networks using mathematical programming and heuristics in a two-step optimisation procedure with detailed exchanger design. Chemical Engineering Science, 144, 372-385.

Sieder, E.N., and Tate, G.E. (1936). Heat transfer and pressure drop if liquids in tubes. Industrial & Engineering Chemistry Research, 28, 1429-1453.

Smith, E.M. (1997). Thermal Design of Heat Exchangers. New York: John Wiley & Sons, Inc.

Walmsley, T.G., Ong, B.H.Y., Klemeš, J.J., Tan, R.R., and Varbanov, P.S. (2019). Circular integration of processes, industries, and economies. Renewable and Sustainable Energy Reviews, 107, 507-515.

Wang, B., Klemeš, J.J., Li, N., Zeng, M., Varbanov, P.S., and Liang, Y. (2021). Heat exchanger network retrofit with heat exchanger and material type selection: a review and a novel method. Renewable and Sustainable Energy Reviews, 138, 110479.

Wu, W., Xie, S., Tan, J., and Ouyang, T. (2022). An integrated design of LNG cold energy recovery for supply demand balance using energy storage devices. Renewable Energy, 183, 830-848.

Yee, T.F., Grossmann, I.E., and Kravanja, Z. (1990). Simultaneous optimization models

จุฬาลงกรณ์มหาวิทยาลัย
Chulalongkorn University

for heat integration—I. Area and energy targeting and modeling of multi-stream exchangers. Computers & Chemical Engineering, 14(10), 1151-1164.

จุฬาลงกรณ์มหาวิทยาลัย
CHULALONGKORN UNIVERSITY

จุฬาลงกรณ์มหาวิทยาลัย
Chulalongkorn University

VITA

NAME	Thanawat Boonvaerojkul
DATE OF BIRTH	24 February 1998
PLACE OF BIRTH	Bangkok
INSTITUTIONS ATTENDED	2016-2019 Bachelor of Science, Department of Chemical Technology, Faculty of Science, Chulalongkorn University, Bangkok, Thailand
HOME ADDRESS	157 Rimklongpapa road, Bangsue, Bangkok 10800
PUBLICATION	Boonvaerojkul, T., and Siemanond, K. (2022). Sustainable MINLP heat exchanger network synthesis with practical detailed design. Proceedings of The 13th Research Symposium on Petrochemical and Material Technology and The 28th PPC Symposium on Petroleum, Petrochemicals, and Polymers, Bangkok, Thailand.

จุฬาลงกรณ์มหาวิทยาลัย
CHULALONGKORN UNIVERSITY